Start-up Guide
original instructions

iDRIVE 100

InterPuls

InterPuls S.p.A.
Via F. Maritano, 11 - 42020 - Albinea (RE) – ITALY
Tel. +39 0522 347511
Fax +39 0522 348516
sales@interpuls.com

InterPuls

MANUFACTURER	InterPuls S.p.A
ADDRESS	Via: F. Maritano, 11 Postal code 42020 - Albinea (RE) - ITALY Tel.: +39 0522 347511 Telefax: +39 0522 348516 Website: www.milkrite-interpuls.com E-mail: sales@interpuls.com
TYPE OF DOCUMENT	Instruction, Use and Maintenance Manual
DOCUMENT CODE	7010023_EN
EDITION	04.17
PRODUCT	Inverter
MODEL	iDrive100
YEAR OF MANUFACTURE	2017

1 GENERAL INFORMATION

1.1 General information and safety warnings

1.1.1 Important warnings

To safeguard the operator and prevent any damage to the equipment, before carrying out any kind of operation it is important to have read and fully understood the instruction manual.

1.1.2 Symbol used in this manual

The following symbols are used in this manual to highlight indications and warnings which are of particular importance:

WARNING
This symbol indicates health and safety regulations designed to protect operators and/or any exposed persons.

CAUTION
This symbol indicates that there is a risk of causing damage to the equipment and/or its components.

NOTE
This symbol is used to highlight useful information.

1.1.3 Rules and regulations for the user

WARNING
Any failure to observe the warnings provided in this manual may lead to equipment malfunctions or damage to the system.

1.1.4 Limitation of liability

InterPuls S.p.A. declines all liability for damage to persons, animals and/or things caused by incorrect use of the equipment.

1.2 Prior using the product

1.2.1 Requirements and rules for personnel and Safety Rules

WARNING
Before using the device, the operator must carefully read the manual.

this appliance can be used by person aged from 18 years and above and persons with reduced physical, sensory or mental capabilities or lack of experience and knowledge if they have been given supervision or instruction concerning use of the appliance in a safe way and understand the hazards involved

During the assembly and activation of the device, follow the instructions in the manual and rules and regulations applying to health and safety at the workplace.

WARNING
Children shall not play with the appliance
Cleaning and user maintenance shall not be made by children without supervision

1.2.2 Connection

WARNING
Stationary appliances not fitted with means for disconnection from the supply mains having a contact separation in all poles that provide full disconnection under overvoltage category III, the instructions state that means for disconnection must be incorporated in the fixed wiring in accordance with the wiring rules

1.3 Disposal

1.3.1 General regulation

The appliances must be disposed of only and exclusively by specially authorized waste disposal companies in accordance with all relative legislation and prescriptions.
The packaging must be consigned to the relative authorized companies to be recycled.

1.4 Fire prevention

1.4.1 Fire prevention

NOTE
The machine is not equipped with fire extinguishers.
The operator must make sure that the place in which the appliance is installed is equipped with an adequate number of suitable fire extinguishers. The extinguishers must be positioned where they are clearly visible and protected from damage and improper use.

1.4.2 Safety regulations

WARNING
It is strictly prohibited to extinguish fires involving electrical equipment with water!

1.4.3 Characteristic of extinguishers

Use powder, foam or halogen extinguishers which must be positioned next to the device.
Operating personnel must receive adequate instruction on how to use the extinguishers.

1.5 Normative references applied

Europe:

- Directive no. 2006/42/EC Machinery Safety
- Directive no. 2004/108/EC Electromagnetic Compatibility (EMC)
- Directive no. 2006/95/EC Low Voltage (LVD)

International:

- IEC (International Electrotechnical Commission) International standards on electricity, electronics and related technologies.

USA:

- FCC Federal Communications Commission
- UL Underwriters Laboratories

Canada:

- IC Industry Canada
- CSA Canadian Standards Association

1.6 Marking

1.6.1 Dataplates affixed to the machine

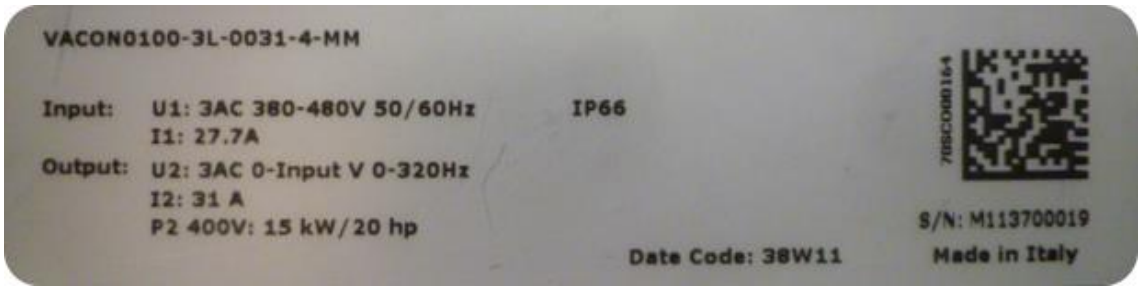

1.7 Safety decals


WARNING or CAUTION


HOT SURFACE


HIGH VOLTAGE

WARNING
The removal or damaging of safety decals is strictly prohibited.

2 DESCRIPTION OF THE MACHINE

2.1 General characteristics

The iDRIVE100 is a frequency controller that operates reading the vacuum level present in the system through the vacuum sensor (we suggest to use InterPuls DVG500 ref.5109020) and acts modifying frequency and voltage supplied to the pump.
In this way iDRIVE100 increases or decreases vacuum production according to vacuum consumption in order to keep stable as much as possible the vacuum level in the system during milking or washing procedures. So the pumps provide only the really necessary vacuum, this allows to save electricity and to reduce the pumps consumption.
InterPuls Frequency Controller can operate one or more lobes, vanes or water ring pumps. If more than one pump is connected to the iDRIVE100, pumps can operate in “parallel mode” or in “cascade mode”:
In “**parallel mode**” pumps are powered directly by the Frequency Controller that will speed them up & down together. In this case is recommended to use identical pumps.
In “**cascade mode**” one or more MAIN PUMPS are directly powered and regulated by the inverter, while the AUXILIARY PUMPS are just switched ON & OFF automatically when necessary trough a contactor.

2.2 iDRIVE100 sizes – 380/480 VAC _ 3phases

CODE	POWER		CONTINUOUS CURRENT I_N	MAX CURRENT I_S	FRAME	DIMENSIONS W x H x D	
	kW	Hp	Amp	Amp		mm	inches
701 9001	1.1	1.5	3.4	6.8	MM4	191 x 314 x 187	7.52 x 12.36 x 7.36
701 9002	1.5	2	4.8	9.6			
701 9003	2.2	3	5.6	11.2			
701 9004	3	5	8	16			
701 9005	4	5	9.6	19.2			
701 9006	5.5	7.5	12	24			
701 9007	7.5	10	16	32	MM5	233 x 366 x 205	9.17 x 14.41 x 8.07
701 9008	11	15	23	46			
701 9009	15	20	31	62			
701 9010	18.5	25	38	76	MM6	314 x 489 x 225	12.36 x 19.25 x 8.86
701 9011	22	30	46	92			
701 9012	30	40	61	122			

2.3 iDRIVE100 sizes – 204/240 VAC _ 3phases

CODE	POWER		CONTINUOUS CURRENT I_N	MAX CURRENT I_S	FRAME	DIMENSIONS W x H x D	
	kW	Hp	Amp	Amp		mm	inches
701 9013	1.1	1.5	6.6	13.2	MM4	191 x 314 x 187	7.52 x 12.36 x 7.36
701 9014	1.5	2	8	16			
701 9015	2.2	3	11	22			
701 9016	3	4	12.5	25			
701 9017	4	5	18	36	MM5	233 x 366 x 205	9.17 x 14.41 x 8.07
701 9018	5.5	7.5	24.2	48.4			
701 9019	7.5	10	31	62			
701 9020	11	15	48	96	MM6	314 x 489 x 225	12.36 x 19.25 x 8.86
701 9021	15	20	62	124			

3 MOUNTING

iDRIVE100 is composed by two separable parts, POWER and CONTROL; these are connected to each other by pluggable terminals.
The power unit, called POWERHEAD, includes all the power electronics (the EMC-filter, IGBTs, capacitors, choke and power boards), while the control boards and the control unit are located in the terminal box.
To install the iDRIVE100, both parts need to be separated. The terminal box must be fixed first and all cabling done. After this, the powerhead will be plugged on the terminal box and fixed with dedicated screws located on top side of the powerhead.

3.1 Wall-mounting

The iDRIVE100 can be mounted in vertical or horizontal position on the wall or any other relatively even mounting plane or machine frame. The minimum screws/bolts size for each frame of inverter are shown in the table below.

FRAME	SCREW
MM4	4 x M5
MM5	4 x M6
MM6	4 x M8

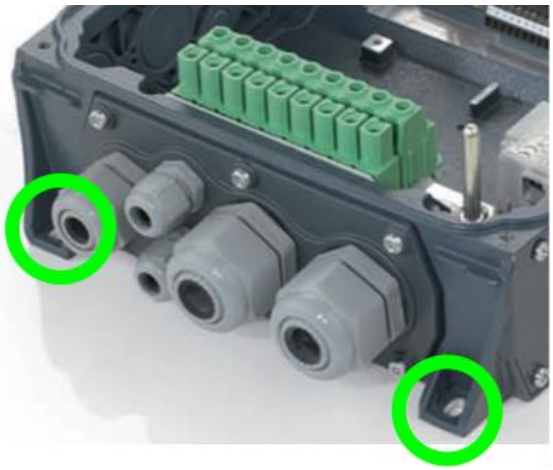

3.1.1 Cooling

The iDRIVE100 produces heat during operation and is cooled down by circulated air forced by a fan (two fans for MM6 frame). Enough free space shall therefore be left around the iDRIVE100 to ensure sufficient air circulation and cooling. The minimum clearances given in table below must not be reduced.

MINIMUM CLEARANCES					
LATERAL		ABOVE		UNDERNEATH	
mm	inches	mm	inches	mm	inches
80	3,15	160	6,3	60	2,36

4 WIRING DIAGRAM

To reveal the control terminals, remove the powerhead of the drive by unscrewing the screws.
The screws used are TORX type as shown below

SCREW TYPE	SCREWDRIVER TYPE	FRAME	SCREW SIZE
		MM4	4 x M5
		MM5	6 x M5
		MM6	4 x M6

The control unit of iDRIVE100 consists of the control board and additional boards (option boards) connected to the slot connectors of the control board.

WARNING
DO NOT APPLY POWER before wiring operations have been completed and the powerhead has been safely closed!
DO NOT MAKE ANY CONNECTIONS to or from the frequency controller when it is connected to the mains.
Please, attentively read the safety instructions and the detailed information about installation, cabling and connections also on the VACON 100X manual.

WARNING
After disconnecting the iDRIVE100 from the mains, wait until the indicators on the keypad go out (if no keypad is connected, see the indicators on the cover). Wait 30 more seconds before doing any work on the connections. Do not open the unit before this time has expired. After expiration of this time, use a measuring equipment to absolutely ensure that no voltage is present. Always ensure absence of voltage before starting any electrical work!

4.1 Pump connection

4.1.1 One pump

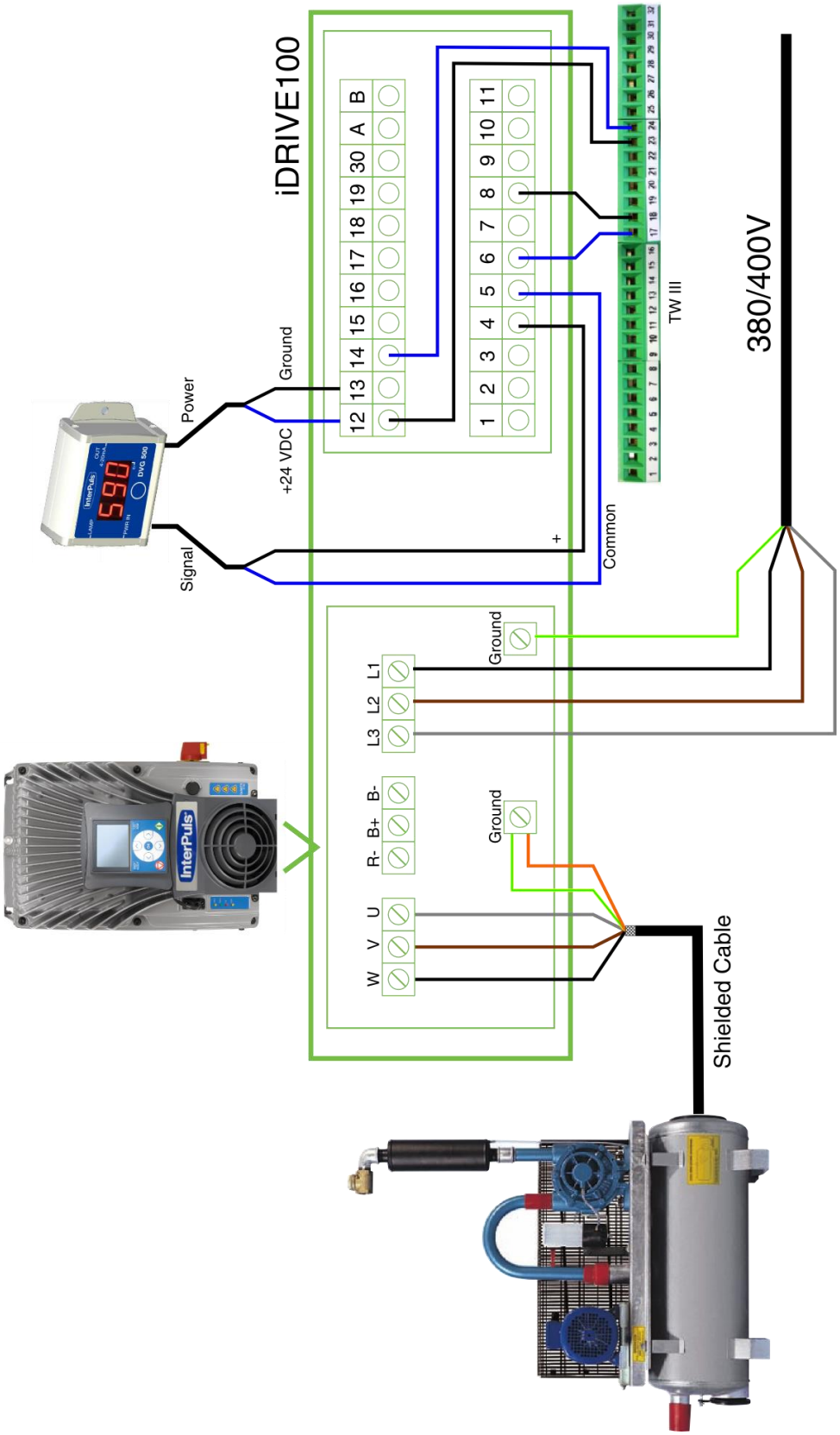

4.1.2 Two pumps in parallel mode

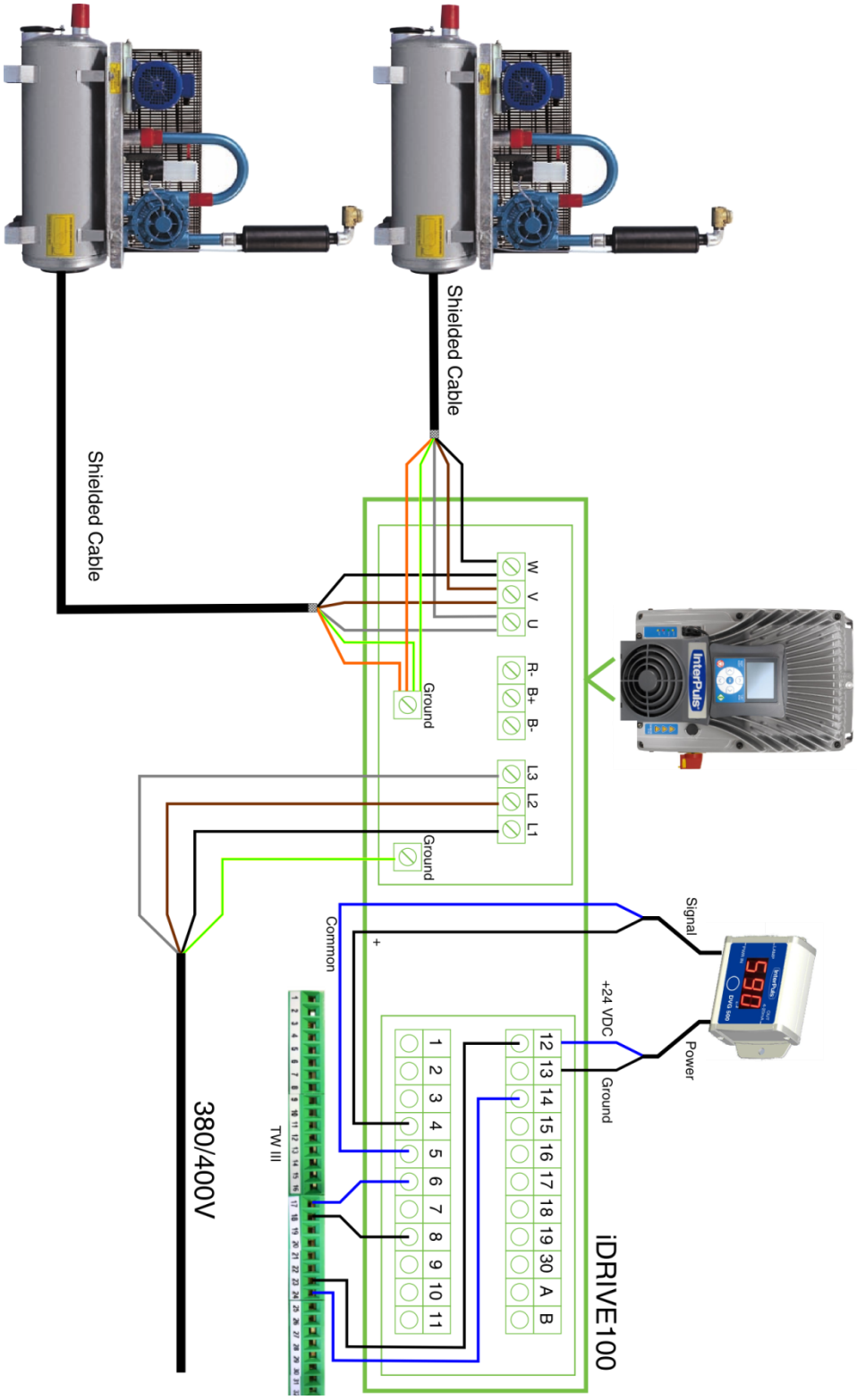

4.1.3 Two pumps in cascade mode

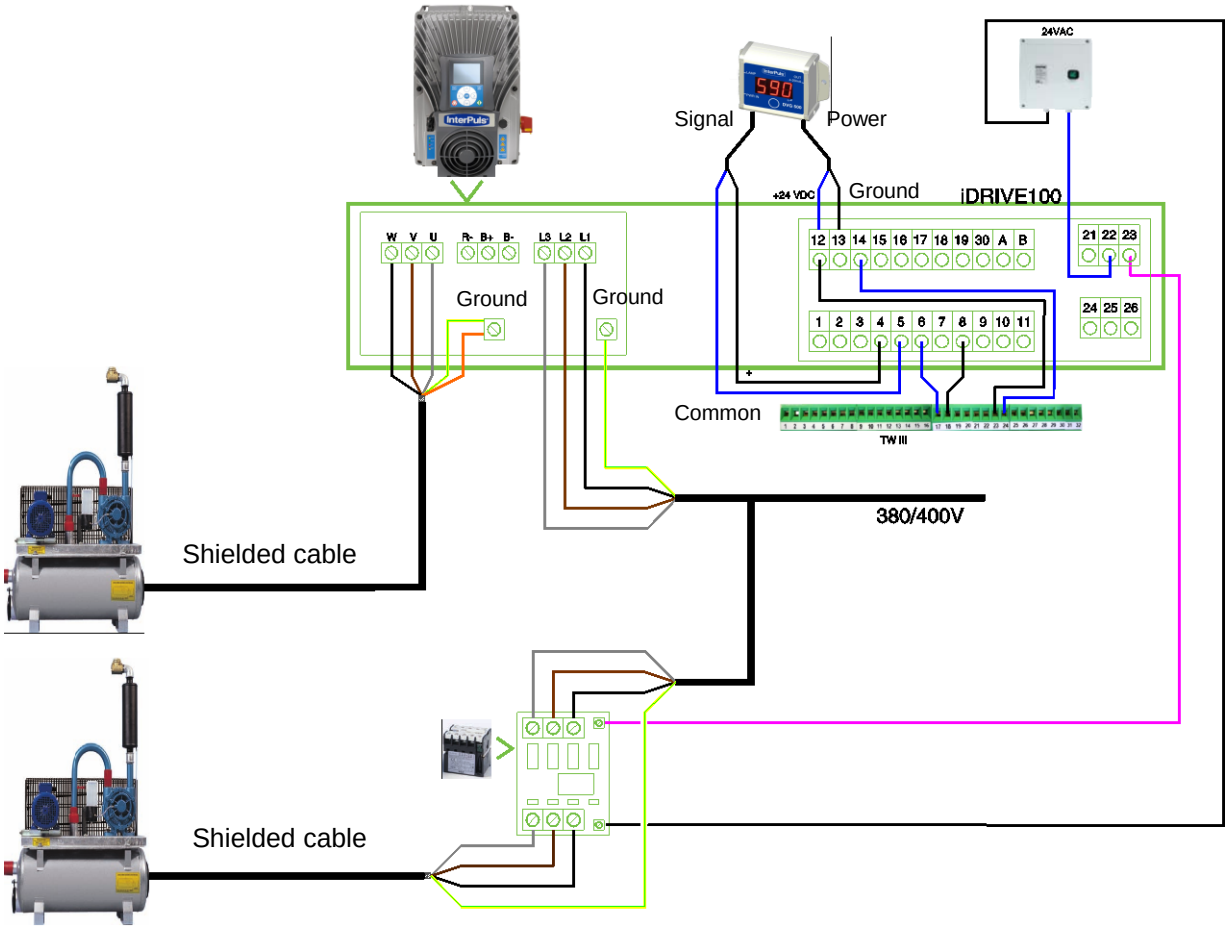

4.1.4 Three pumps in cascade mode

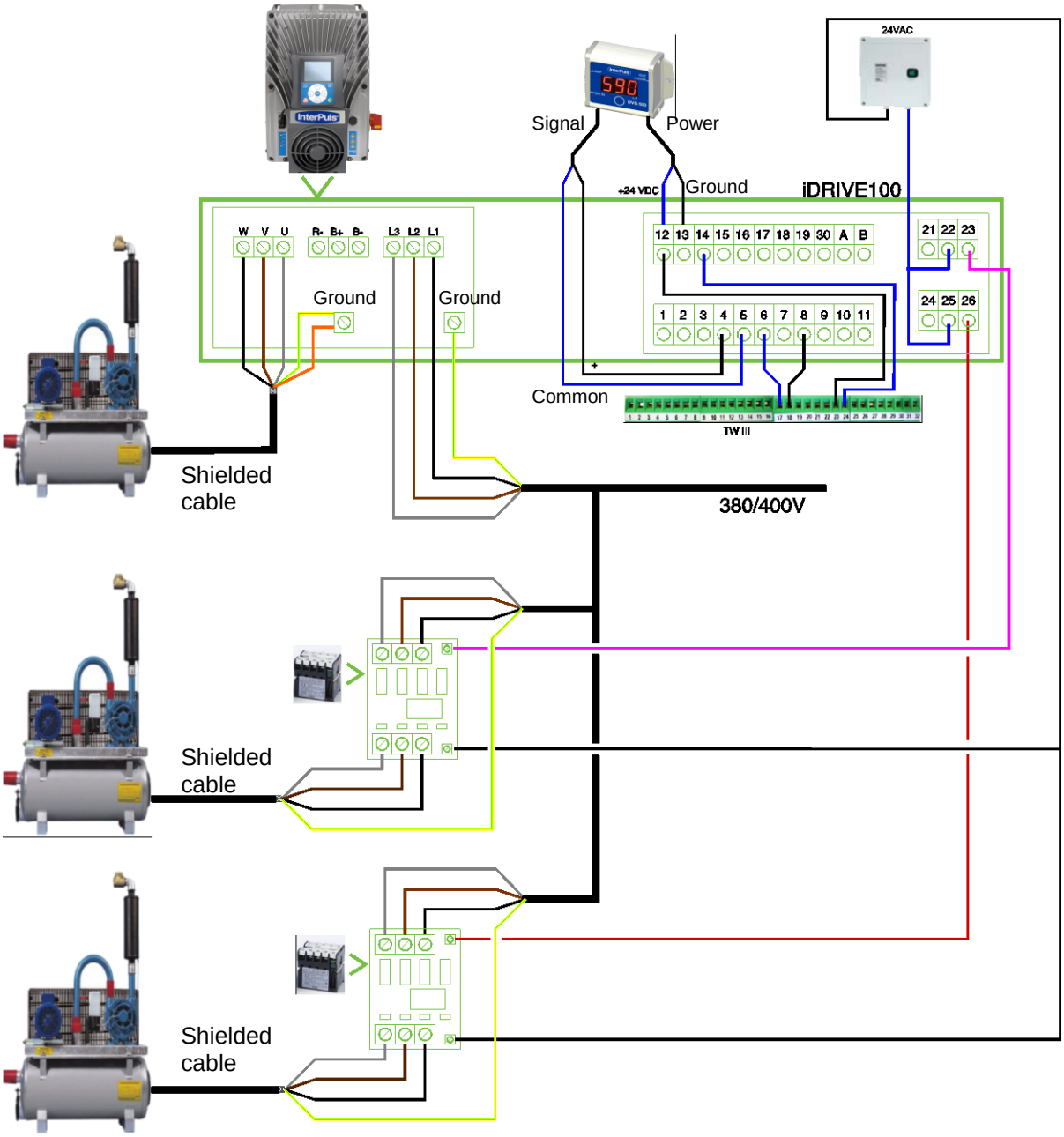

4.1.5 Two pumps in parallel mode and one in cascade

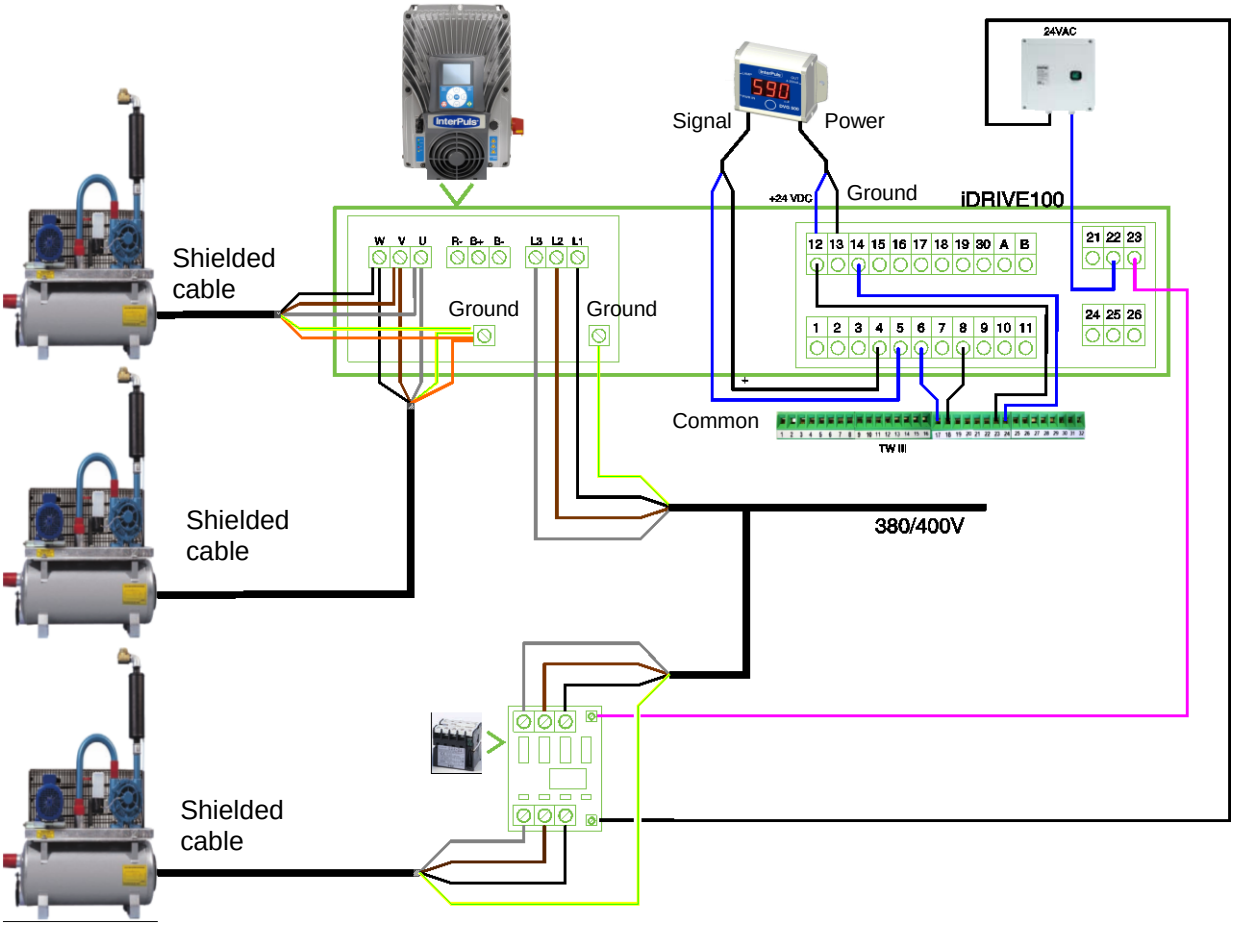

4.1.6 Auxiliary fan connection

The auxiliary fan is a fan mounted on the motor; the fan is connected directly to the supply line, so it works always at the maximum speed cooling the motor especially when the motor runs at low frequency.

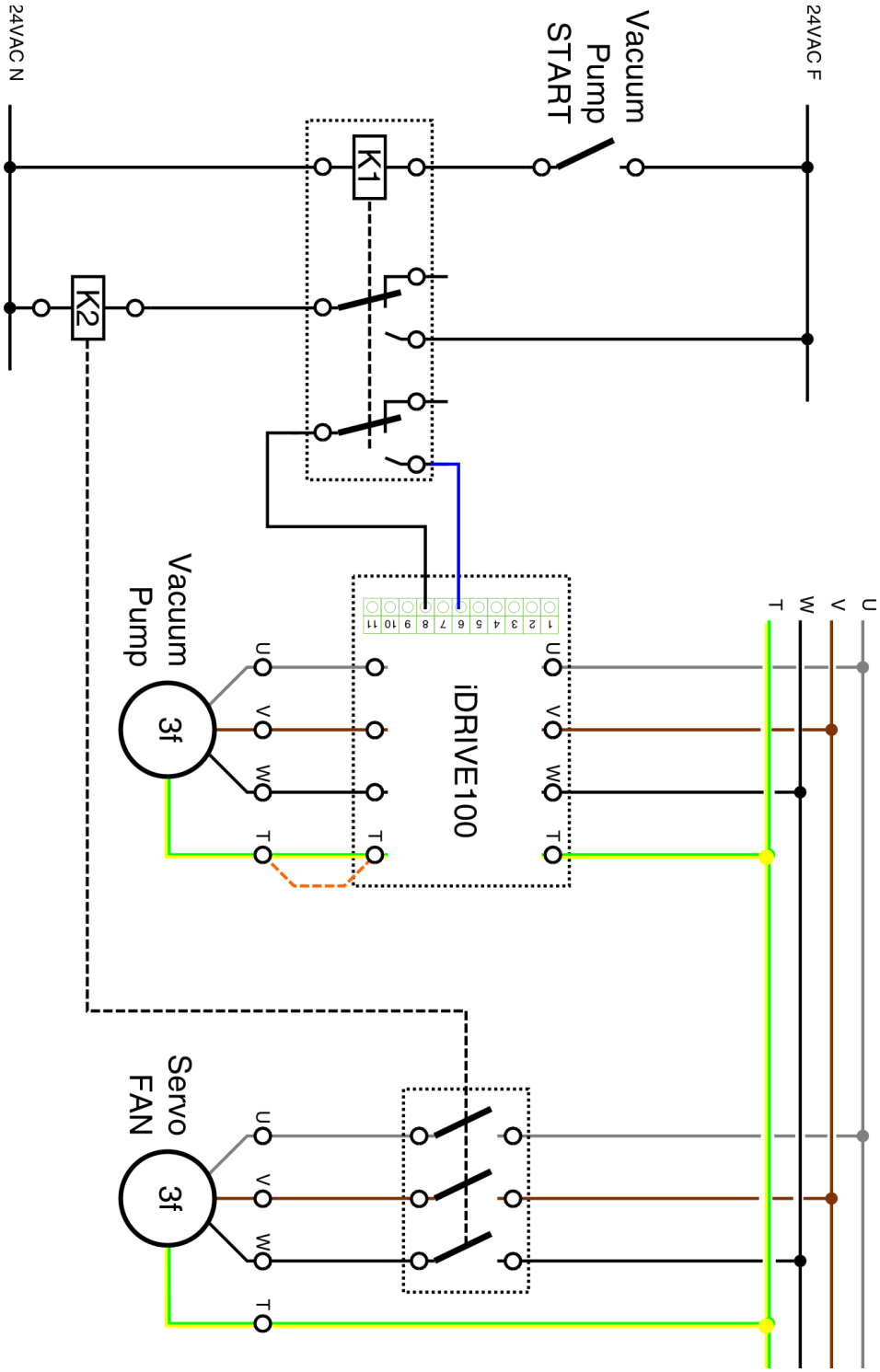

4.2 Power connection

4.2.1 Connection from electrical line to iDRIVE100

iDRIVE100 needs a three-phase line with 380-480VAC input voltage U_{IN} (tolerance -15%/+10%) and 50/60 Hz input frequency (tolerance ±10%). To connect the iDRIVE100 use a three-phase cable with 4pins.

CAUTION
In the case of inverter dedicated to the Japanese market, supply with 208/220V (50/60Hz)

Cables section depends on power consumption (See also *4.4 - Cable and fuse size*)
The mains cables are connected to L1 - L2 - L3; connect a 3 phases power cable to these terminals and connect the ground as shown below.

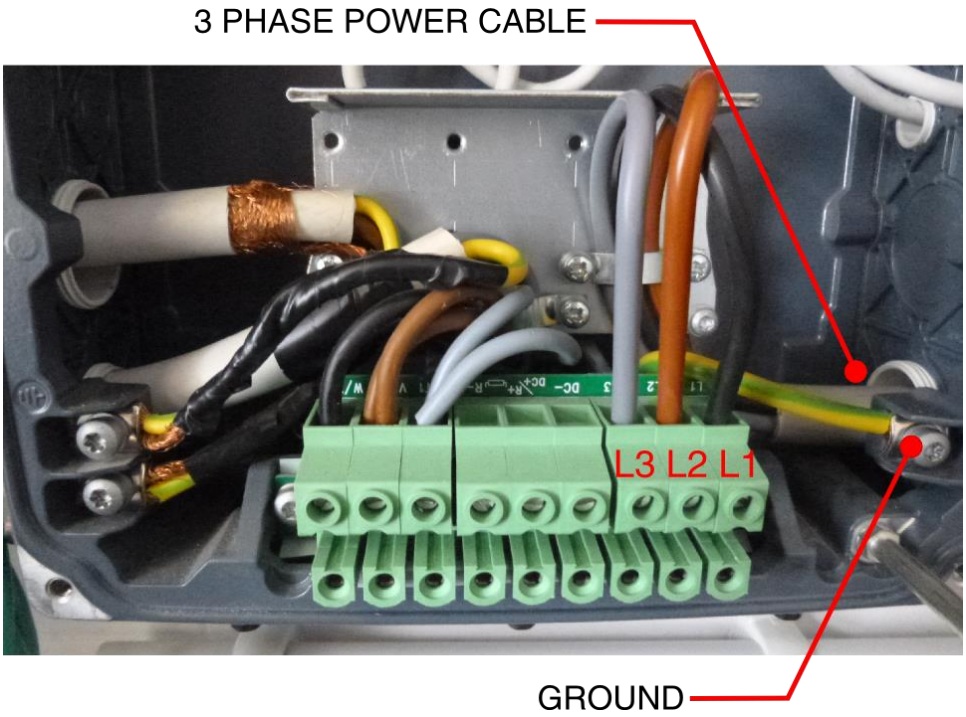

WARNING
After disconnecting the iDRIVE100 from the mains, wait until the fan stops and the indicators on the powerhead go out. Wait 30 more seconds before doing any work on the connections. Do not open the unit before this time has expired. After expiration of this time, use a measuring equipment to absolutely ensure that no voltage is present. Always ensure absence of voltage before starting any electrical work!

4.2.2 Connection from iDRIVE100 to motor

iDRIVE100 provides to the motor an output voltage between 0÷Input voltage. For the output current (see table in *2.2 - iDRIVE100 sizes*). The MIN and MAX value of output frequency can be set using parameters **P.3.1.1 MAX FREQUENCY** e **P.3.3.1 MIN FREQUENCY** (see also *6 - PARAMETER SETTING*).

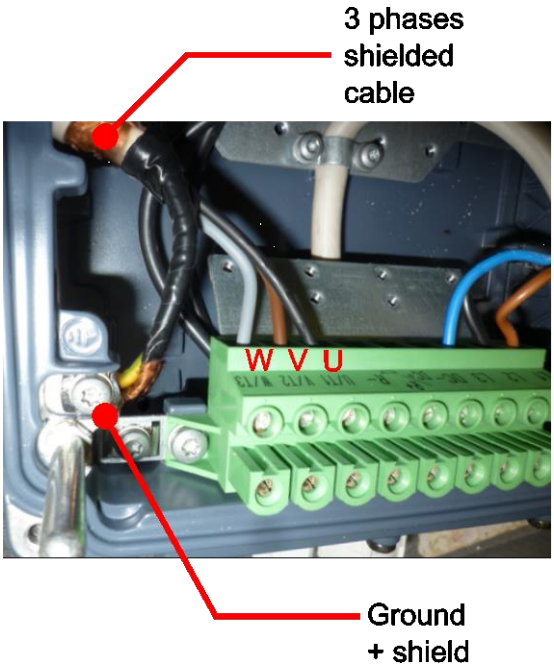

NOTE
Use a SHIELDED 3 phase cable (MCCMK cable recommended) to connect the motor to the FCR terminals marked with U – V – W. Always ground the shield both on the inverter and on the motor.

CAUTION
Place the motor cables far from others and avoid placing them in long parallel lines with other cables. if necessary run in parallel with other cables, note the minimum distances between the motor cables and other cables.

SHIELDED CABLE LENGHT	MINIMUM DISTANCE
<50 m	0.3 m
<200m	1.0 m

The given distances also apply between the motor cables and signal cables of other systems.
The motor cables should cross other cables with an angle of 90 degrees.
Better use motor cables NOT LONGER than 4 - 5 meters.

WARNING
Always disconnect the device from the power and wait a few minutes before starting maintenance, cleaning and repairs

4.2.3 DELTA and STAR motor wiring

NOTE
The motor windings can be designed to work at 400V, with DELTA WIRING (Δ) or with STAR WIRING (Y). Please, refer to your motor instructions to be sure which is the correct wiring mode at 400V .

For a quick reference, you can check the Motor Plate:
if you read Volt Δ / Y and 230 / 400, connect the motor in STAR MODE "Y"
if you read Volt Δ / Y and 400 / 690, connect the motor in DELTA MODE "Δ" (or "TRIANGLE")

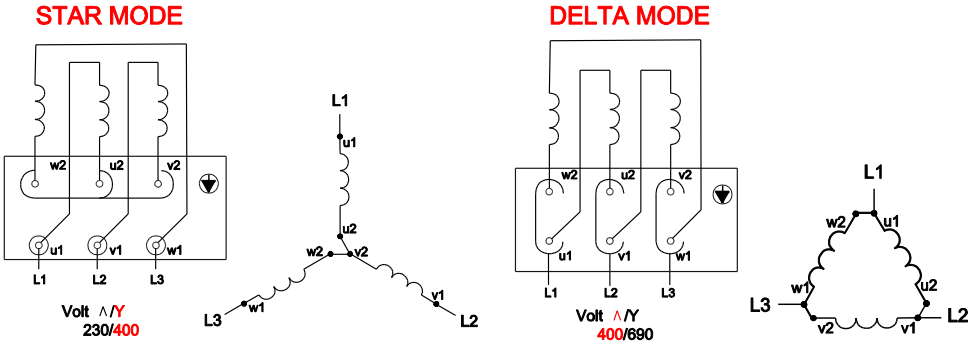

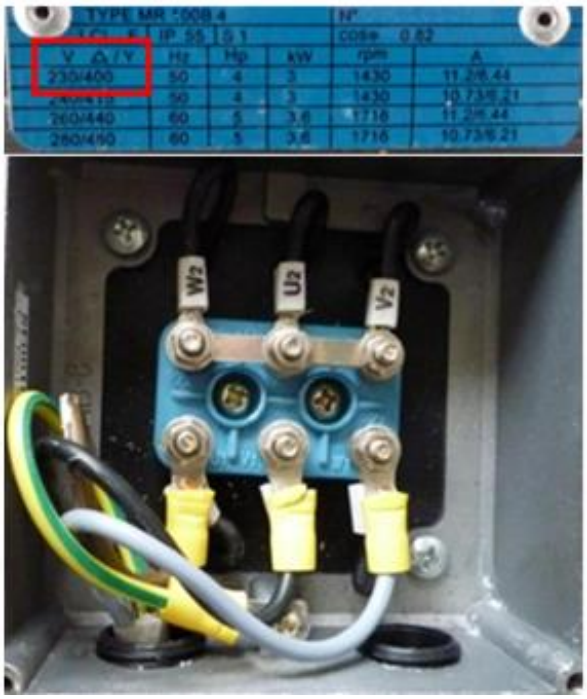

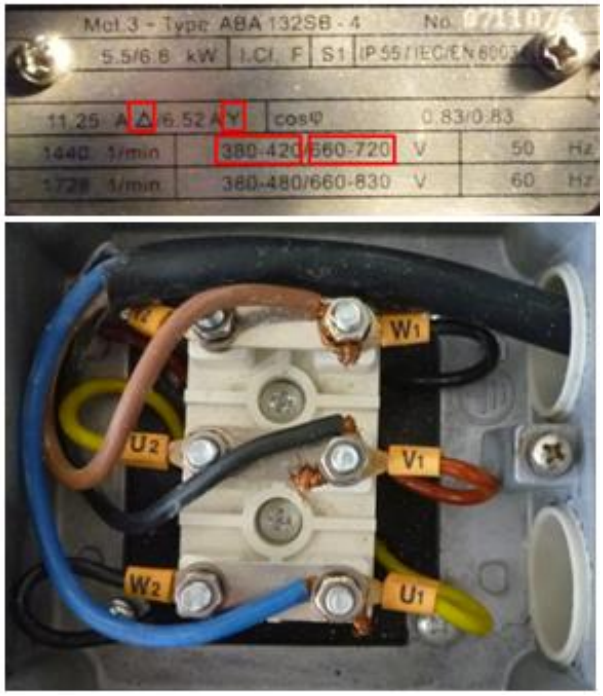

4.2.4 Before switch on the power!

CAUTION
When you apply power for the first time to the motor, there is the possibility that the main pumps start rotating in the wrong direction. Be ready to stop the pumps immediately!!!
If this happens, remove the power and exchange 2 wires of the three-phases cable (example: you can exchange U with V). You can act on FCR side or on motor side, but only on one of these. When done, close the chassis, apply the power and start the pumps again. Pumps must rotate in the correct direction, otherwise something went wrong during the previous procedure Control connection

4.3 Signals connection

WARNING
Before starting this procedure, check that none of the components of iDRIVE100 and the iDRIVE100 itself are powered.

The control board is equipped with 22 fixed control I/O terminals (1÷19, 30, A, B) and the relay board with 6 (21÷23 and 24÷26). The control cables shall be at least 0.5 mm² screened multicore cables. The maximum terminal wire size is 1.5 mm² for control terminals.

4.3.1 Pump START/STOP with manual switch

When testing or calibrating the Frequency Controller it can be helpful to connect a manual switch to terminals 6 + 8 to quickly start/stop the main pumps without operating over other devices.
The START/STOP of the pumps is controlled by a CLEAN CONTACT connected to terminals 6 and 8.

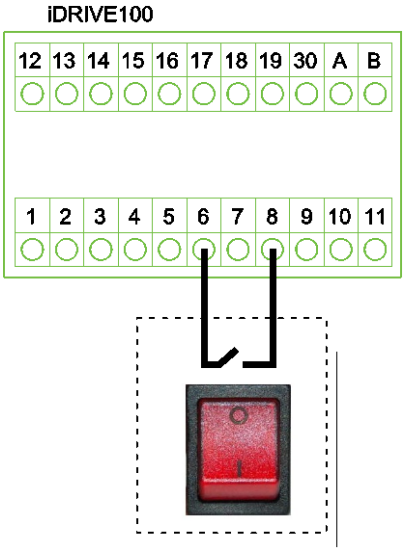

4.3.2 Top Wash III + Inverter

To operate with TOP WASH III you must connect the terminals 6-8 of the iDrive100 to the terminals 17-18 of the TOP WASH III (clean contact). The TOP WASH III will close the contact to activate the iDRIVE100 in order to power the vacuum pump during washing and milking procedure

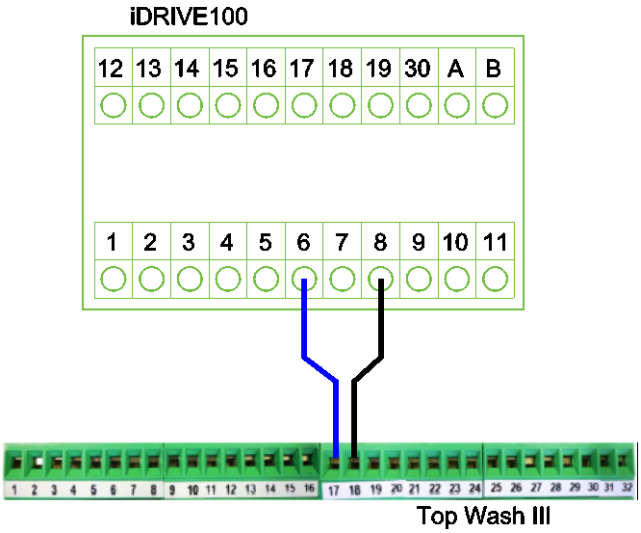

NOTE
If your wash programmer is NOT provided with a CLEAN CONTACT (NOT SELF POWERED contact!!) which is closed both during WASHING and during MILKING, you can use a RELAY or you can act with a MANUAL SWITCH as described above.

4.3.3 Top Wash III + Inverter (Dual Vacuum Level, WITHOUT valve)

If you want to increase vacuum during washing process, it is necessary to connect the terminals 12 and 14 of the iDrive100 to a CLEAN CONTACT which is CLOSED DURING WASHING, while it is OPEN in during STANDBY and MILKING mode. With Top Wash III you can use the clean contact 23 and 24. In this way the iDrive100 will increase the vacuum when the terminals 12-14 are closed.

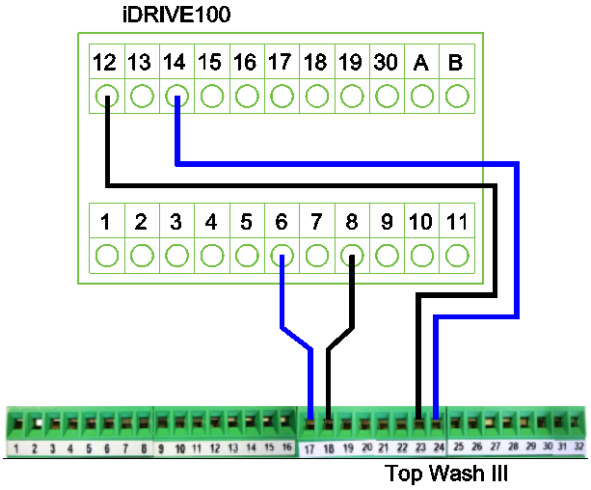

NOTE
On Top Wash III set the Parameters:
AIR INJ + SANIVAC OFF at 00:00
AIR INJ + SANIVAC ON at 00:01

4.3.4 Top Wash III + Inverter + Sanivac (Dual Vacuum Level WITH valve)

If you want to have different vacuum level during washing and during milking and you want to use the vacuum regulator valve, you need to connect also the InterPuls SANIVAC. You can connect the SANIVAC terminals to Top Wash III 21 and 22 contacts which outputs 24VAC.

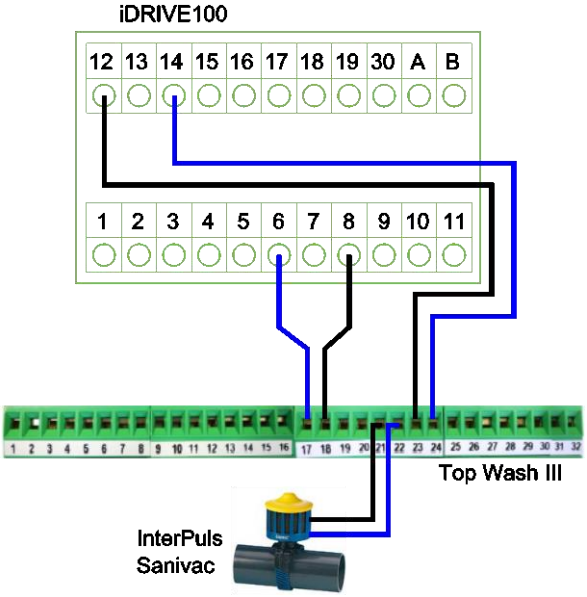

NOTE
On Top Wash III set the Parameters:
AIR INJ + SANIVAC OFF at 00:00
AIR INJ + SANIVAC ON at 00:01

4.3.5 Top Wash III + Inverter + Turbo Wash

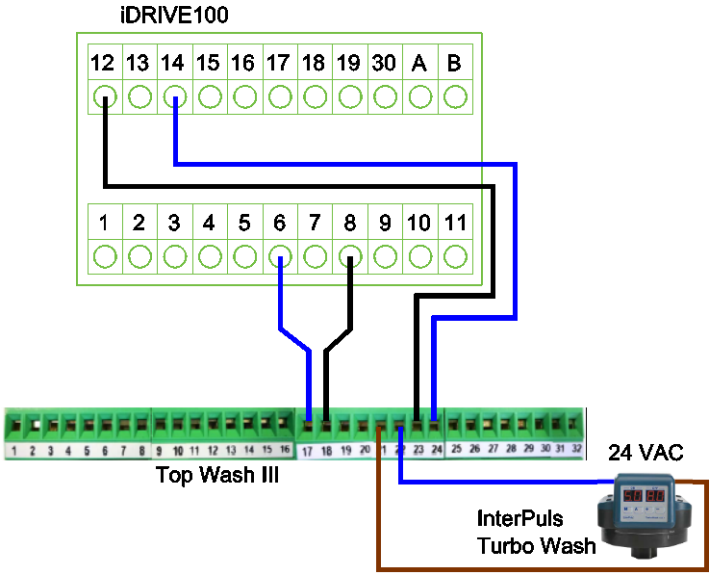

4.3.6 Top Wash III + Inverter + Turbo Wash + Milk Meter

You may need to provide a clean contact also to the Milk-Meters in order to set them in wash mode. In this case you can use the TWIN RELE 24VAC (Ref.9002116).

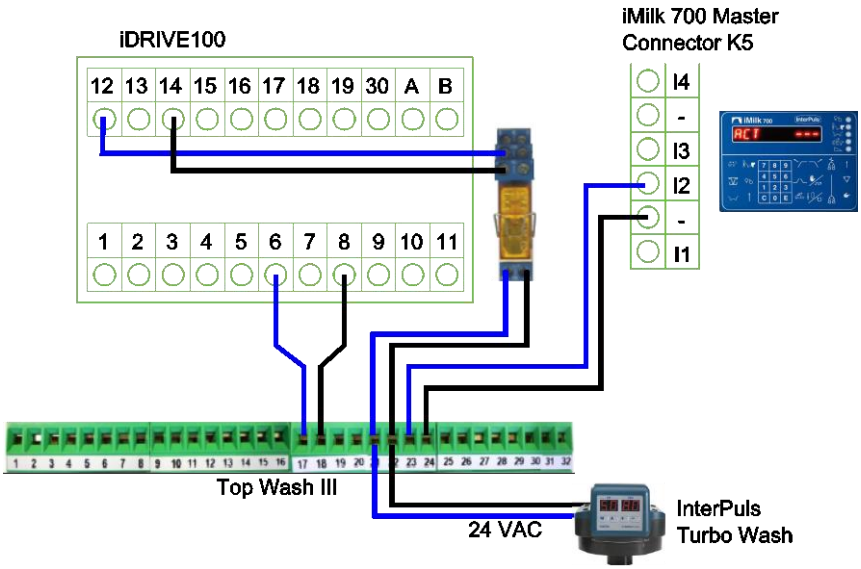

4.3.7 Top Wash III + Inverter + Sanivac + Milk Meter

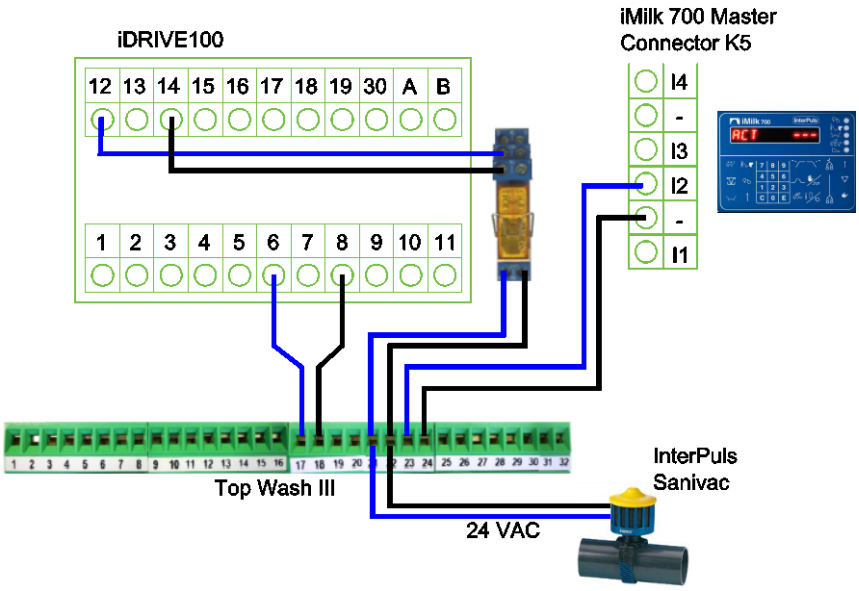

4.3.8 Top Wash III + Inverter + Sanivac + Turbo Wash + Milk Meter

NOTE
In this specific situation, for Sanivac and Turbo Wash you can use a small IT01 Transformer 24V DC (Ref.1042122).

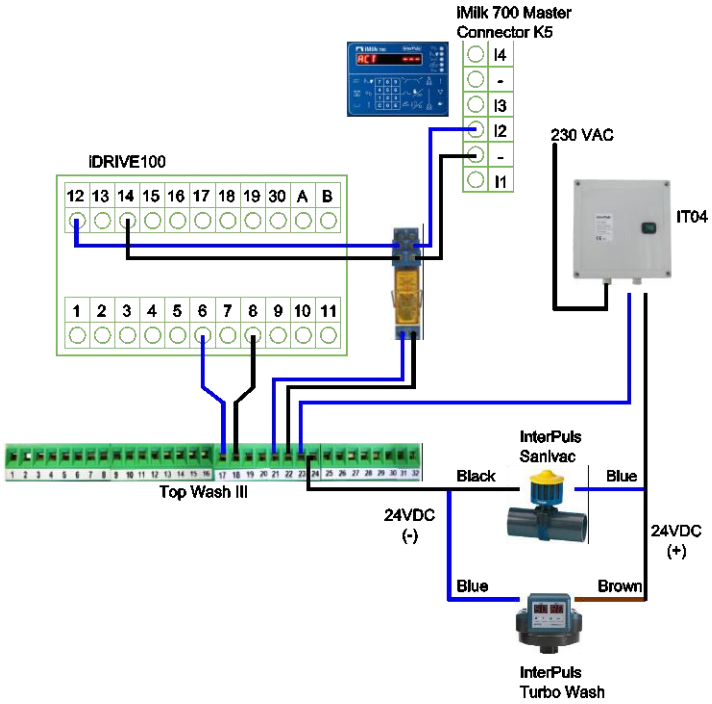

4.3.9 Top Wash III + Inverter + Sanivac + Turbo Wash

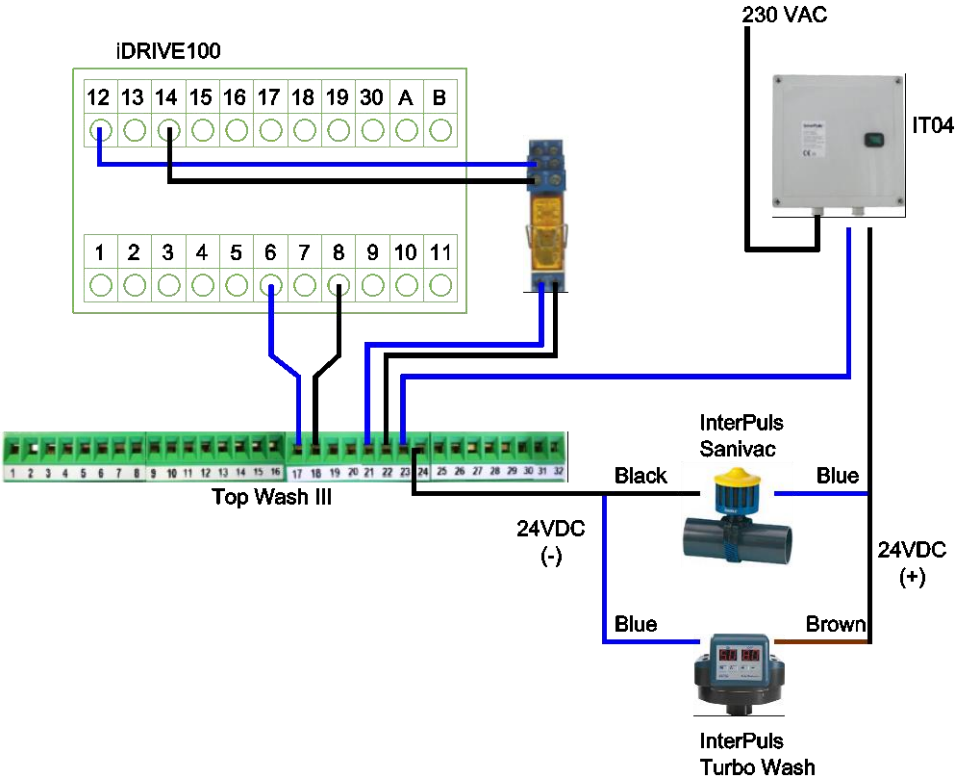

4.3.10 Keep auxiliary pumps ON during washing (ONLY for pumps in cascade mode)

NOTE
If you wish to constantly power one or both auxiliary pumps in washing mode:
- connect also 15 + 12 to WASHING-MODE-RELAY to keep Aux Pump 1 constantly powered in washing-mode
- connect also 16 + 12 to WASHING-MODE-RELAY to keep Aux Pump 2 constantly powered in washing-mode.

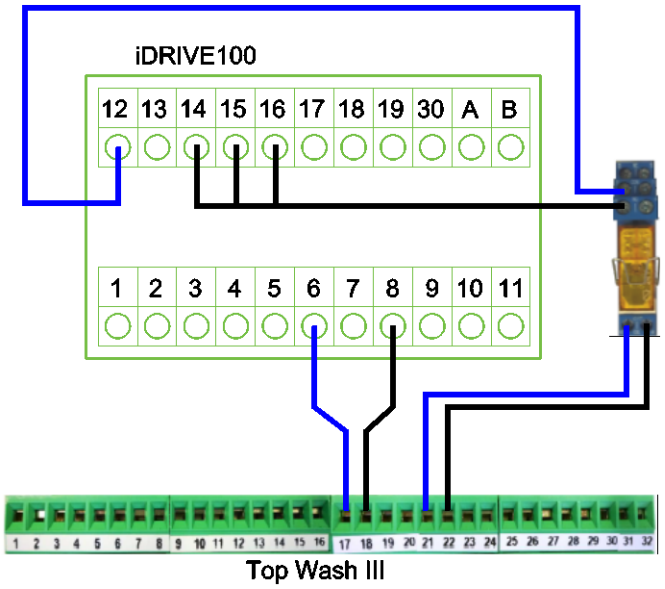

In case you need to keep only one auxiliary pump constantly powered in washing mode, we suggest to put a manual switch on these 2 circuits in order to periodically rotate the auxiliary pump which is constantly powered during washing.

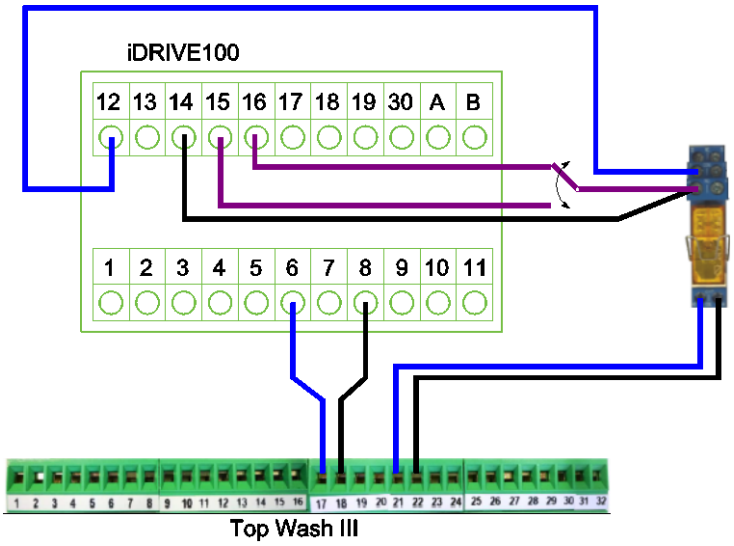

4.4 Cable and fuse size

The cables and the fuses must be dimensioned according to the frequency converter nominal OUTPUT current which you can find on the rating plate. Dimensioning according to the output current is recommended because the frequency converter input current never significantly exceeds the output current.
These instructions apply only to cases with one motor and one cable connection from the iDRIVE100 to the motor. If three or more cables are used in parallel for bigger units each cable requires a separate overload protection. The recommended fuse types are gG/gL (IEC 60269-1) or class T (UL & CSA). The fuse voltage rating should be selected according to the supply network. Bigger fuses than what is recommended below shall not be used.
The cable dimensioning is based on the criteria of the International Standard IEC60364-5-52. Cables must be PVC-isolated.
The table below shows typical Cu-cable sizes and the corresponding fuse sizes that can be used with the inverter. The final selection should be made according to local regulations, cable installation conditions and cable specification.

NOTE
MCCMK shielded cables are recommended from FCR to motor

NOTE
These instructions apply only to cases with one motor and one cable connection from the AC drive to the motor. In any other case, ask the factory for more information

FRAME	CODE	I_{INPUT}(A)	FUSE(A)	MAINS AND MOTOR CABLE Cu (mm^2)	TERMINAL CABLE SIZE	
					Main Terminal (mm^2)	Earth Terminal (mm^2)
MM4	701 9001	3.4	6	3*1.5+1.5	1 – 6 solid 1 – 4 stranded	1 – 6 or ring terminal
	701 9002	4.6	6	3*1.5+1.5		
	701 9003	5.4	10	3*1.5+1.5		
	701 9004	8.1	10	3*1.5+1.5		
	701 9005	9.3	16	3*2.5+2.5		
	701 9006	11.3	16	3*2.5+2.5		
MM5	701 9007	15.4	20	3*6+6	1 – 10 Cu	1 – 10
	701 9008	21.3	25	3*6+6		
	701 9009	28.4	32	3*10+10		
MM6	701 9010	36.7	40	3*10+10	2.5 – 50 Cu	2.5 – 35 or ring terminal
	701 9011	43.6	50	3*16+16		
	701 9012	58.2	63	3*25+16		

5 COMPONENTS

5.1 Vacuum regulation valve (STABILVAC)

Stabilvac Servo Vacuum Regulator accurately compensates small vacuum consumptions during normal milking operations. In case of installation of FCR together with Stabilvac, we suggest to select the Vacuum regulator according to the table below:

Vacuum pumps capacity @50kPa	Vacuum Regulator	Ref. Monoblock	Ref. Separate
1000÷2500 l/min	Stabilvac3600	5019008	5019011
2500÷3000 l/min	Stabilvac4000	5000908	5009010
3000÷4000 l/min	Stabilvac6000	5009009	5009011
4000÷5600 l/min	Stabilvac double 4000	2 x 5019008	2 x 5019011
More than 5600 l/min	Stabilvac double 6000	2 x 5009009	2 x 5009011

NOTE
The selection of the correct Regulator is not depending only on the total capacity of the vacuum pumps, but also on specific characteristics of the system that can involve a higher vacuum consumptions and a lower vacuum reserve. For this reason, it is advisable to bring also a smaller regulator when you first calibrate the system.

5.2 Vacuum Sensor

5.2.1 DVG500

We suggest to use InterPuls DVG500 Digital Vacuum Gauge (ref. 5109020).
Any minimum fluctuation in the magnitude of 0.1 kPa is constantly monitored through InterPuls Digital Vacuum Gauge DVG500. In case of a major entrance of air, the InterPuls iDRIVE100 promptly accelerates the pumps to instantly recover and maintain vacuum stable in any conditions.

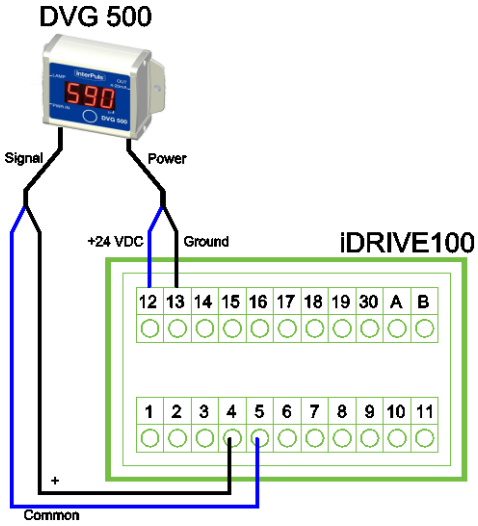

Specifications:
- signal output 4-20 mA.
- display with resolution 0,1 kPa,
- scale in kPa & in Hg,
- accuracy ± 0.4% at full scale
- moisture resistance (IP65) and temperature resistance (-10÷ 50 °C)

NOTE

Frequency Controller is pre-set to operate with sensors providing signal 4-20 mA.
If you want to use different sensors (20-4mA , 1-5V , 0-10V) refer to chapters *5.2.4 - DIP SWITCHES* and *5.2.3 - Custom Sensor* to set the correct parameters.

5.2.2 IFM current sensor

IFM PE3029 (our ref. 7010024) is a current sensor with a digital display. The sensor is already pre-programmed to work with iDRIVE100 and doesn't require any changes to the parameters.

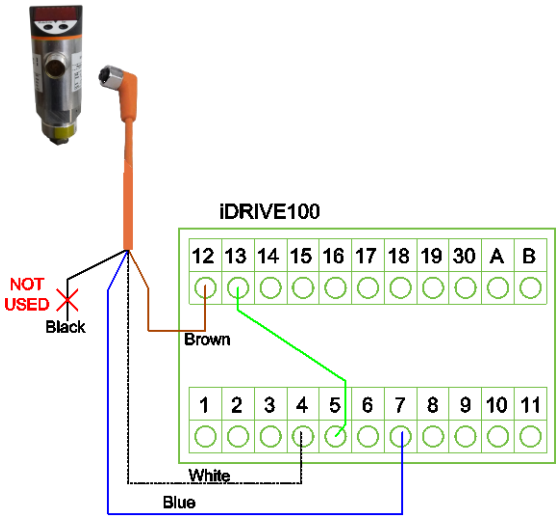

With IFM PE3029	
4	→ sensor signal +
5 – 13	→ bridge together
7	→ sensor signal Common
12	→ 24VDC +

To change the parameters, push the left button (MODE/ENTER) to scroll. Once the desired parameter, press and hold the right button (SET) until the display stops flashing and shows the parameter value. Now you can edit it with SET and by pressing MODE/ENTER the new parameter will be saved.

Param.	Description	Note
SP1	Not used	
rP1	Not used	
OU1	Not used	
OU2	Analogue Output 2	Type of analogue output - "I" for 4-20mA **DON'T CHANGE THIS PARAMETER**
EF	Shows advanced parameters	
→ Uni	Unit of measurement	bar – mbar – MPa – kPa – PSI - inHg
HI	Highest vacuum level read	Press and hold SET button to reset
LO	Lowest vacuum level read	Press and hold SET button to reset
dSI	Not used	
drI	Not used	
dAP	Not used	
diS	Update rate and orientation of the display	If you install the sensor upside down, set diS on "rd1" to turn the display.

NOTE:
If you use this sensor, leave the inverter parameter <u>SENSOR SELECTION P.3.2.1</u> on DVG500

Display Indication		
[OL]	OVERLOAD PRESSURE	Pressure exceeded the measuring range (over 0kPa)
[UL]	UNDERPRESSURE RANGE	Pressure below the measuring range (under -100kPa)
[SC1]	SHORT CIRCUIT ON OUT 1	Check that the blue wire and the black do not cause a short circuit
[Err]	INTERNAL FAULT	The ERROR indication flashing even if the display is deactivated

5.2.3 Custom Sensor

You can use also other different type of sensor, for example voltage sensor. You can set the analog input 1 (connectors 2-3) for working with the sensor.
In this case you need to set in the correct way the parameters in submenu **3.10.2.1 CUSTOM AI1**.

- set **P.3.10.2.1.3 AI1 SIGNAL RANGE** selecting the range of your sensor
- if your range is opposite than the signal range proposeD (for example the parameter is set on 0-10V but you need 10-0V), set the **P.3.10.2.1.6 AI1 SIGNAL INV** on "Inverted"
- finally check that the DIP switch corresponding to AI1 is set in the correct mode (current or voltage) see also next chapter

For example, if you use a 0-10V voltage sensor you have to set:

- P.3.10.2.1.3 = 0-10V/0-20mA
- P.3.10.2.1.6 = Normal

and then connect it as show below.

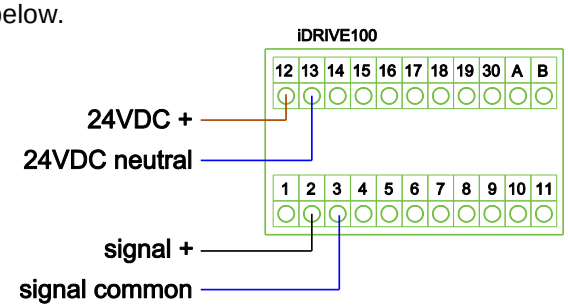

5.2.4 DIP SWITCHES

The iDRIVE100 embodies some dip switches; each of these switches have three positions:

1. "C" means that the input has been set in current mode.
2. "V" means voltage mode
3. The middle position "0" is for Test mode

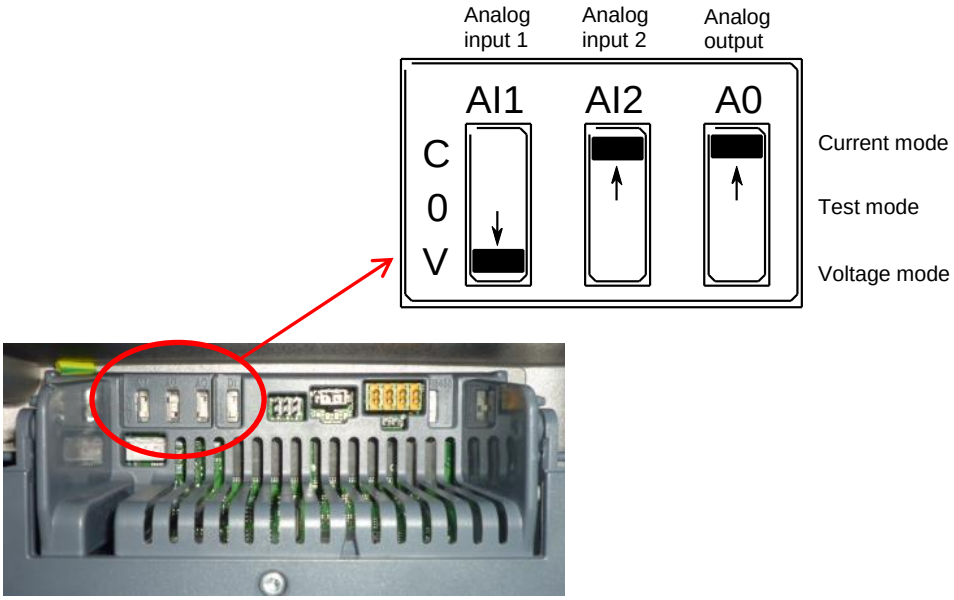

If you're using DVG500 be sure that the corresponding DIP SWITCHES (AI2 for connection on clamps 4-5) is set on CURRENT (C)

5.3 Integrated switch

The purpose of the *Integrated Switch* is to disconnect the iDRIVE100 from the mains when service actions are needed. The switch is available as option and it can be integrated in the drive. It can be mounted on either side of the drive. Each size of iDRIVE100 needs a different switch, as showed in the table below.

CODE	iDRIVE100 FRAME
7010015	Switch for MM4
7010014	Switch for MM5
7010021	Switch for MM6

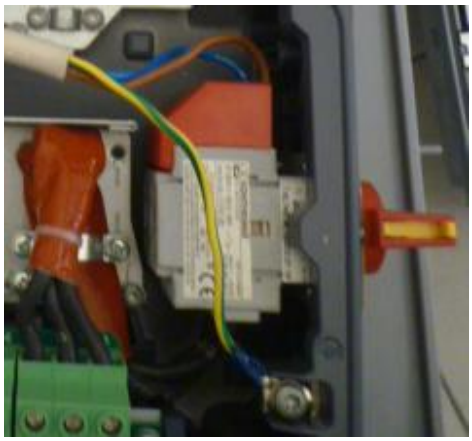

5.4 Display board

The ***Display Board*** (Ref. 7010001) is the interface between the iDRIVE100 frequency converter and the user. With the Display Board it is possible to control and to set the motor and the milking/washing parameters. It's also possible to visualize the last 40 faults occurred (See also *6.1 - Programming with Display Board*). Each iDRIVE100 is already equipped with its display board

6 PARAMETER SETTING

Thanks to its dedicated “InterPuls Milk software”, it is possible to tune the vacuum reserve on the actual needs of the parlour, preventing waste of electricity and minimizing the noise in the environment.
Pre-set parameters grant quickest reaction of the pumps in case of an extraordinary vacuum loss and preventing air-hammer effect when more pumps are powered together at the same time.
Only a few parameters need to be programmed according to the characteristics of the system and the preference of the installer, however every parameter can be easily adjusted through Display Board or through an external laptop connected to the iDRIVE100 through cable (LIVE software must be installed on the computer, ask InterPuls for more details).

6.1 Programming with Display Board

The graphical display indicates the status of the motor, the value of parameters and any irregularities in iDRIVE100 functions. On the display, the user sees information about his present location in the menu structure and the item displayed.
The data on the control keypad are arranged in menus and submenus. The menus are used for example for the display and editing of measurement and control signals, parameter settings and fault displays.
The first menu level consists of menus M1 to M6 and is called the Main menu.

NUMBER	MENU’
M1	QUICK SETUP
M2	MONITOR
M3	PARAMETERS
M4	DIAGNOSTIC
M5	I/O AND HARDWARE
M6	USER SETTING

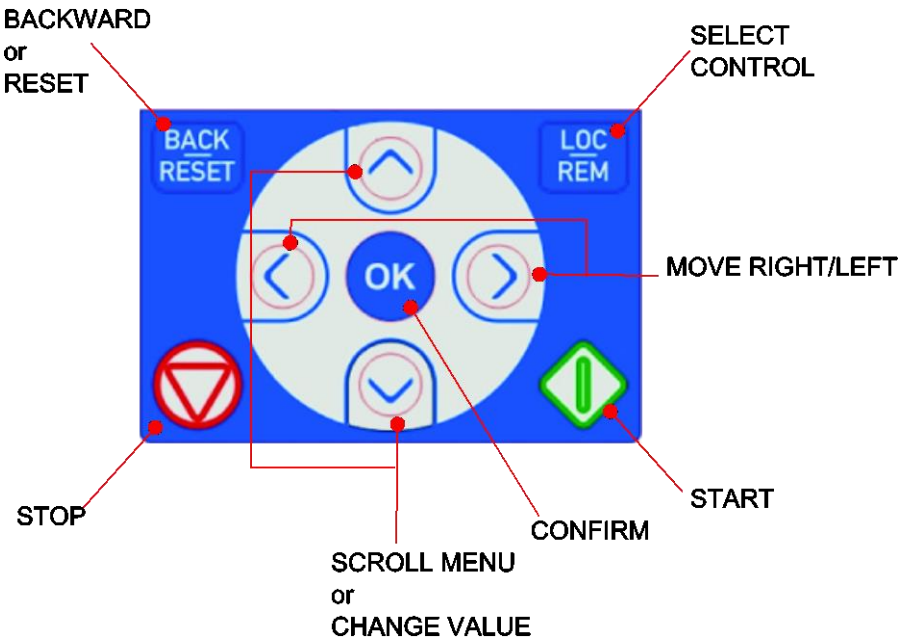

The user can navigate in the main menu using ***up/down button*** 

The desired submenu can be entered from the main using the ***right buttons***  or the ***OK button*** 

.

To return to the previous level, press the ***Back/Reset button*** 

.

6.1.1 Graphical display

ICON	NAME	TYPE	DESCRIPTION
	Parameters	Folder	Contains a list of parameters that can be modified by user
	Edit	Command	Allows to modify the value of selected parameter
	Favorites	Folder	Contains a list of parameters chosen by users
	Add to favorites	Command	Adds an item to the Favorites Folder
	Monitor/Diagnostic	Folder	Contains a list of parameters that can be only visualized
	Help	Command	This command shows a short description of parameter. These information are also available for faults and alarms.

6.1.2 Editing value

To modify one parameter, move through menu and submenus using or and entering it with OK Once you get to the desired parameter (must be an editable parameter), select it with the **OK** button and choose EDIT . Confirm with **OK** button. Now you can change the selecting parameter using and . Confirm with **OK**

For instance, to increase the Minimum Frequency starting from Multimonitor Mode, you can follow this procedure:

BUTTON	EXPLANATION
BACK RESET	**Exit** Multimonitor Mode.
BACK RESET	**Return** in the Main Menu.
	Surf through the Main Menu until “Parameters”
OK	**Enter** into “Parameters” menu. Display will show the first submenus.
	Surf through the submenus until “Operative Parameters”
OK	**Enter** into submenu. Display will show the first editable parameter.
	Surf through the parameters until “Min Frequency”
OK	Enter into this parameter.
OK	Choose EDIT
	Modify the value
OK	Confirm the new value

6.1.3 Startup wizard

At the first start, you can set all the parameters starting the ***Startup Wizard*** choosing “YES”.

In the ***Startup Wizard***, you will be prompted for essential information needed by the drive so that it can start controlling the frequency of your pump. Once you have connected power to your iDRIVE100 frequency converter, follow these instructions to easily set up your drive.

The Startup Wizard can be re-initiated by activating the hide parameter **P6.5.1 RESTORE FACTORY DEFAULTS** (this setting deletes all changes made so far)

6.2 Parameters list

6.2.1 Quick Setup

In QUICK SETUP menu you can set all the main parameters to make work your system. Each parameter is also reported in its own dedicated menu.

Number	Name	Actual Value	Unit of measurement	Default value
1. Quick Setup (12)				
P 1.1	Motor Nom Voltg	400	V	0
P 1.2	Motor Nom Freq	50,00	Hz	0,00
P 1.3	Motor Nom Speed	1440	rpm	0
P 1.4	Motor Nom Currnt	10,5	A	0,0
P 1.5	Motor Cos Phi	0,84		0,00
P 1.6	Sensor Selection	DVG 500		DVG 500
P 1.7	Milking Vacuum	42,0	kPa	42,0
P 1.8	Washing Vacuum	50,0	kPa	50,0
P 1.9	Regulat. Sensitivity	100	%	100
P 1.10	Min Frequency	25,00	Hz	25,00
P 1.11	Start Overboost	Disabled		Disabled
P 1.12	MultimonitorView	3x3		2x2

- **P1.1 Motor Nominal Voltage :** set motor rated voltage
- **P1.2 Motor Nominal Frequency :** set motor rated frequency
- **P1.3 Motor Nominal Speed :** set motor rated speed
- **P1.4 Motor Nominal Current :** set rated current absorbed by motor
- **P1.5 Motor Cos Phi :** set the rated motor cos Phi
- **P1.6 Sensor Selection :** set on DVG500 if you're using DVG500 or IFM sensor
- **P1.7 Milking Vacuum :** set the desired vacuum level during milking. If vacuum decreases below this value, the Frequency Controller speeds the pump up.
- **P1.8 Washing Vacuum :** set the desired vacuum level for Washing Mode.
- **P1.9 Regulation Sensitivity :** set the speed of response
- **P1.10 Minimum Frequency :** set the minimum speed of the pump, check the manufacturer's instructions (for safety reason, if not sure, not below 30Hz for vanes pumps and 33Hz for lobes pumps.
- **P1.11 Start Overboost :** Enable this if you have trouble to reach correct vacuum level during start. At the start the motor will go at max frequency+20% for few seconds
- **P1.12 Multimonitor View :** with this parameter you can choose the number of values to see in the Multimonitor

6.2.2 Motor settings

Following parameters all concern the motors characteristics.

3.1. Motor Settings (8)				
P 3.1.1	Max Frequency	50,00	Hz	50,00
P 3.1.2	Motor Nom Voltg	400	V	0
P 3.1.3	Motor Nom Freq	50,00	Hz	0,00
P 3.1.4	Motor Nom Speed	1440	rpm	0
P 3.1.5	Motor Nom Currnt	10,5	A	0,0
P 3.1.6	Motor Cos Phi	0,84		0,00
P 3.1.7	Current Limit	18,0	A	0,0
P 3.1.8	Auxiliary Fan	No		No

- **P3.1.1 Maximum Frequency :** set the maximum allowed frequency
- **P3.1.2 Motor Nominal Voltage (P.1.1):** set motor rated voltage
- **P3.1.3 Motor Nominal Frequency (P.1.2):** set motor rated frequency
- **P3.1.4 Motor Nominal Speed (P.1.3):** set motor rated speed
- **P3.1.5 Motor Nominal Current (P.1.4):** set rated current absorbed by motor
- **P3.1.6 Motor Cos Phi (P.1.5):** set the rated motor cos Phi
- **P3.1.7 Current Limit :** set the maximum current from inverter to motor (it's not an overcurrent limit)
- **P3.1.8 Auxiliary Fan :** set it YES if you have a fan with independed supply

NOTE:
All these value can be found in the motor data that you read on the Motor Plate.
See also *4.2.3 - DELTA and STAR motor wiring* for more information.

WARNING
Set the maximum motor speed (frequency) according to the motor and the machine connected to it.

WARNING
If you have a system with pumps in parallel configuration, you have to use equal motors and set the parameters P3.1.5 – P3.1.7 as sum of two individual values.

6.2.3 Sensor parameters

3.2. Sensor (3)				
P 3.2.1	Sensor Selection	DVG 500		DVG 500
P 3.2.2	Sensor Max Value	100,0	kPa	100,0
P 3.2.3	Sensor Offset	0,0	kPa	0,0

- **P3.2.1 Sensor Selection (P.1.6):** select the vacuum sensor

DVG500	=	20-4 mA	⇨	Connect to terminal 4-5	InterPuls Sensor DVG 500
AI2	=	0-10 V	⇨	Connect to terminal 2-3	Voltage sensor (custom)

- **P3.2.2 Sensor Maximum Value :** when the pump is ON, increase/decrease this value to adjust the kPa reading (usually from 99 to 101)
- **P3.2.3 Sensor Offset :** when the pump is OFF, increase/decrease this value to adjust the sensor 0kPa (e.g. if the display still shows 0,02 kPa, adjust this parameter to 0,02)

6.2.4 Operative parameters

3.3. Operative Parameters (9)				
P 3.3.1	Min Frequency	50,00	Hz	25,00
P 3.3.2	Milking Vacuum	45,0	kPa	42,0
P 3.3.3	Washing Vacuum	50,0	kPa	50,0
P 3.3.4	Regulat. Sensitivity	100	%	100
P 3.3.5	Start Overboost	Disabled		Disabled
P 3.3.6	Vacuum Safety Limit	60,0	kPa	60,0
P 3.3.7	Show Advanced Menu	No		No
P 3.3.8	Edit lock level	Edit enabled		Edit enabled
P 3.3.9	Password	0		0

- **P3.3.1 Minimum Frequency (P1.10):** set the minimum speed of the pump, check the manufacturer's instructions (if not sure, not below 30Hz for vanes pumps and 33Hz for lobes pumps)
- **P3.3.2 Milking Vacuum (P.1.7):** set desire vacuum level during milking. If vacuum decreases below this value, the Frequency Controller speeds the pump up.

NOTE
Operating with Vacuum Regulation Valve set this value 0,8 ÷ 1,0 kPa below the desired milking vacuum level and operate the Stabilvac Regulator.

- **P3.3.3 Washing Vacuum (P1.8):** set desired vacuum level for Washing Mode.

NOTE
If a Vacuum Regulation Valve is installed in the system and during the wash phase a higher vacuum level is desired, an InterPuls Sanivac devices is required. Follow Sanivac instruction for details. Keep auxiliary pumps constantly powered during washing is recommended, see *also* *4.3.10 - Keep auxiliary pumps ON during washing (ONLY for pumps in cascade mode)*

- **P3.3.4 Regulation Sensitivity (P1.9):** speed of response
- **P3.3.5 Start Overboost (P1.11):** Enable this if you have trouble to reach correct vacuum level during start. At the start the motor will go at max frequency+20% for few seconds
- **P.3.3.6 Vacuum Safety limit :** Maximum vacuum value before stop the pumps
- **P3.3.7 Show Advanced Menus :** with this parameter you can show all the inverter parameters
- **P3.3.8 Edit Lock Level :** with this parameters you can lock/unlock the parameters to prevent unauthorized changes. There are three type of protections:

EDIT ENABLED	LEVEL 0 : All changes enable
EDIT SETPOINTS ONLY	LEVEL 1 : Only vacuum level editable
EDIT DISABLED	LEVEL 2 : No one changes allowed

- **P3.3.9 Password :** insert 100 to unlock until LEVEL 1 or 468 to remove all protection (LEVEL 0)

CAUTION

All the parameters to make operating the iDRIVE100 are already visible.

Don't modify hidden parameters unless under the supervision of a qualified staff and after suggestions of InterPuls.

6.3 Multimonitor

The quicker way to check if the iDRIVE100 is working properly, is to check the output parameters using the multimonitor. The multimonitor is a screen on the display board that shows some parameters updating them in real time. By modifying the **P.1.12 MULTIMONITOR VIEW** it's possible to change the number of parameters shown in the multimonitor (2x2, 3x2, 3x3). To change a shown parameter, select it using the 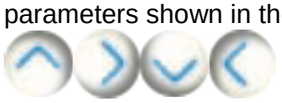 buttons and then press 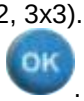 . The display shows now the entire list of parameters compatible to the multimonitor. Select the new parameter with  .

6.4 Parameter for pumps in cascade mode

If you use pumps in cascade configuration, it's only necessary to set the parameter **P3.4.1 NUMBER OF MOTORS**, including the main motor.

NOTE
Set on YES parameters P3.3.7 SHOW ADVANCED PARAMETERS to show P3.4.1

The inverter will automatically set all other related parameters, including motors rotation.
For example, for the following configuration, you have to set this parameter to 2.

NOTE
If you use pump in parallel configuration don't change P3.4.1 (let it set to "1")

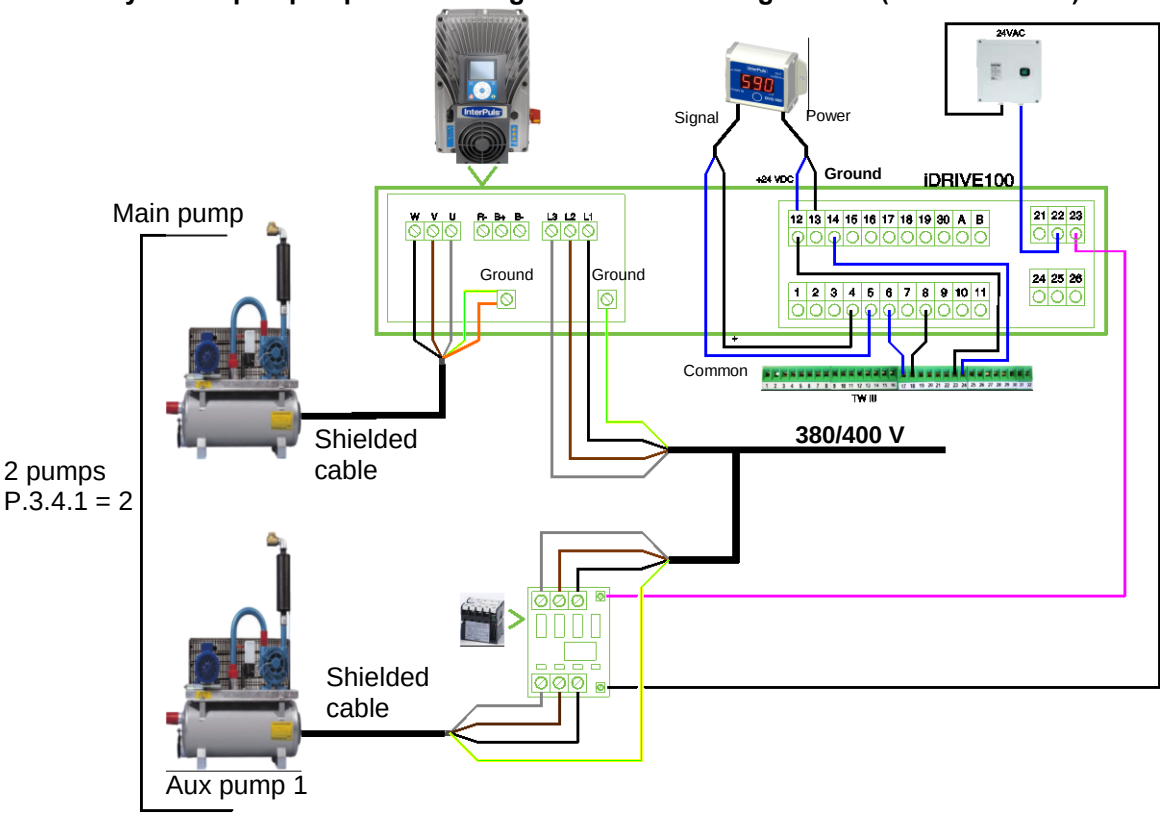

7 TUNING

7.1 Tuning without STABILVAVC (vacuum regulator)

If the manufacturer states that your vacuum pump can work at very low frequency without any problems, you can set the parameter **P3.3.1 MINIMUM FREQUENCY** at 0.00 Hz and in this case the iDRIVE100 will take full control of the vacuum regulation.

You shall set the parameter **P3.3.2 MILKING VACUUM** exactly at the desired vacuum level for milking.
If, for instance, you want to milk at 42 kPa, you shall set the parameter **P3.3.2 MILKING VACUUM** at 42 kPa. When the milking-machine is activated, the pump will start at the maximum speed to rise-up vacuum, but when the desired vacuum level has been reached, the pump will slow down to lower frequency and it will even be free to stop if necessary to prevent vacuum from growing over the set-point.
If you want to wash at a higher vacuum level, you shall set the parameter **P3.3.3 WASHING VACUUM** at the desired level for washing, like as for instance at 52 kPa.
The VACUUM REGULATOR shall be set at a higher vacuum level (53 kPa) and it will operate only in case of emergency, as if it was a safety valve.

CAUTION
Please, be sure that every-day the vacuum regulator is activated even for a very short time, just to prevent that the rubber diaphragm will not stick if never activated for several days.

If for instance you have set the **MILKING VACUUM** at 42 kPa and the **WASHING VACUUM** at 52 kPa, you shall adjust the Vacuum Regulator at 52.5 kPa, so that during washing from it is activated from time to time when the vacuum tends to increase from the set-point.
The InterPuls SANIVAC is not necessary in this configuration.

WARNING
Before setting the parameter P3.3.1 MINIMUM FREQUENCY at 0.00 Hz, please, be sure that the manufacturer of your vacuum pump declares that it can work at lowest frequency, otherwise there is the risk that the lubrication is not sufficient or that the vanes hit and crack or that the lobes overheat and you can seriously damage the vacuum pump or the motor.

Please, also be sure that the electric motor can spin at low frequency without overheating. If necessary, consider the possibility to replace the motor ventilator with a servo-fan which can cool-down the motor even if it spins at lowest frequencies (see also *4.1.6 - Auxiliary fan connection*. Ask InterPuls for more details).

7.2 Tuning with STABILVAC (vacuum regulator)

In case the manufacturer of your pump declares that it can NOT work below a given frequency (for instance below 20 Hz or below 33 Hz, etc...), you have to keep the parameter **P3.3.1 MIN FREQUENCY** slightly above this minimum value.

NOTE
Consider also the ratio between the motor-pulley and the pump-pulley to calculate the proper minimum value.

If for instance the manufacturer of your vacuum pump declares that it can work at 22 Hz, you shall set the parameter **P3.3.1 MIN FREQUENCY** at 25 Hz.
When the milking machine is activated, the vacuum pump will start at the maximum speed (according to the **P3.1.1 MAX FREQUENCY**) in order to rise-up quickly the vacuum level, but when the milking vacuum level has been reached (**P3.3.2 MILKING VACUUM**), the pump is not free to slow-down to frequency lower than 25 Hz and, if all the clusters are closed and there are NO VACUUM LOSS in the system, vacuum will continue to grow till the VACUUM REGULATOR will open and take the control of the vacuum level.
For this reasons you shall adjust the Vacuum Regulator at 0,8 kPa HIGHER than the iDRIVE100 set-point (P.3.3.2).

If, for instance, you want to milk at 42 kPa, you shall:

1. set the inverter parameter **P3.3.2 MILKING VACUUM** at 41,6 kPa (= 0,4 kPa LOWER than the set-point).
2. adjust the VACUUM REGULATOR at 42,4 kPa (=0,4kPa HIGHER than desired set-point, =0,8kPa HIGHER than iDRIVE100 value)

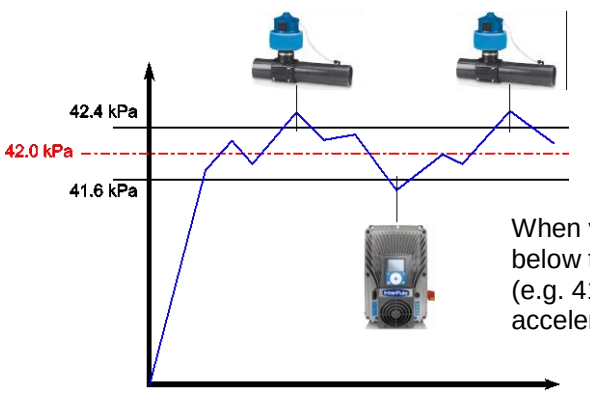

When vacuum tends to grow above the value sets on the Vacuum Regulator (e.g. 42,4 kPa), it will open

When vacuum tends to decrease below the value sets on the iDrive100 (e.g. 41,6 kPa), the Inverter will accelerate the pump

NOTE
If you want to wash at a higher vacuum level, you shall:

- **Set the parameter P3.3.3 WASHING VACUUM at the desired level for washing if the system is working WITHOUT VALVE**
- **Use the InterPuls SANIVAC (Ref.5039009) to increase the set-point of the vacuum regulator if the system is working WITH VALVE**

7.3 Tuning test

To verify that the system is well calibrated, you can follow this simple procedure:

1. Open the shut-off valve of a first milking cluster → the iDRIVE100 must increase the pump speed in order to compensate the vacuum loss. The vacuum level must remain at the set value and the vacuum fluctuation must remain acceptable.

NOTE
If a Vacuum Regulation Valve is present in the system and the min frequency of the inverter is quite high due to system configuration, it is possible that the inverter doesn't speed up the pumps after the first and second cluster openings. Verify that the vacuum regulation is fast and the level is stable anyway.

2. Open a second cluster while the first cluster is still open → the inverter must increase the pump speed even more in order to compensate the vacuum loss. The vacuum level must remain at the set value and the Vacuum Fluctuation must remain acceptable.

3. Open the third than the fourth cluster keeping the previous ones open. The pump should speed-up again and again. When the maximum frequency is reached, the pump can't speed-up any more in order to compensate the vacuum loss and the vacuum level drops down.

4. Now close the cluster one by one and verify that also in this situation the vacuum level remains acceptable.

8 TROUBLE SHOOTING

PROBLEM	PROBABLE CAUSE	SOLUTION
When you apply power for the first time the main pump start rotating in the wrong direction. (See also *4.2.4 - Before switch on the power!*)	Two phases cables are reversed	exchange 2 wires of the three-phases cable
Pump accelerates too early and/or vacuum is not stable	Vacuum reserve is not sufficient to grant maximum vacuum stability	Slightly increase **P3.3.1 MIN FREQUENCY** parameter and repeat the test
	The current STABILVAC Regulator is oversized for this system	Repeat the test with a smaller regulator
	NOTE: **If the problem persists, please speed the pumps up to 50Hz - 50kPa close all the milking clusters and check the total vacuum reserve of the system with an air-flow meter. If vacuum reserve is below 150 l/min for every milking cluster, it is recommendable to increase the capacity of the pumps.**	
The motor stops and the fault **MOTOR OVERTEMPERATURE** (code 16, ID 150) appears on the display.	The parameter “temperature calculated” has an error	If you have additional external fan, change the parameter **P.3.1.8 AUXILIARY FAN** and set it on YES
The residual Current Switch trips frequently without apparent reasons. (See also chapter *Problem on Current Switch*)	The motor cables are too long	Don’t use cables longer than 5m
	The residual Current Switch is not suitable to operate with a Frequency Drive	It is recommendable to use a **SI** Residual Current Switches
	If you are using a 30mA **SI** switch there is the possibility that it is disturbed by the electro-magnetic interferences discharged through the Ground Cable.	Slightly modify the parameter **P3.6.1 SWITCHING FREQ**
	If strictly necessary, it’s also possible to change the iDRIVE100 ECM class protection	Open the inverter and remove the EMC screws on the powerhead
iDRIVE100 is powered but it doesn’t works when 6-8 contact is closed	Check the **P.2.4.7** from multimonitor (to show it, set the **P.1.12** on 3x2)	If the first value is OFF, check the cable from 6-8 contact
	If the cable (6-8 connection) has no problem, iDRIVE100 is not set to work in automatic mode	Pressed LOC REM on the display board and set it on “Remote”.

It's not possible to modify any parameters	The security for unauthorized changes is enable	Insert the correct password P3.3.9 (100 or 468) and then remove the protection in P3.3.8
The iDRIVE100 and the sensor read a different vacuum value	It's necessary to calibrate the sensor	Keep the sensor at 0.00 kPa and check that also iDRIVE100 shows the same value. If not so, then modify the **P3.2.3 SENSOR OFFSET**. For example, if DVG500 read 0.00 kPa, but iDRIVE100 shows 1.20 kPa, increase P3.2.3 until 1.20 kPa. Then increase vacuum until the value you want for milking; if the sensor value is different from the inverter, then slightly modify the parameter **P3.2.2 SENSOR MAX VALUE.**

8.1 Problem on Current Switch

If the residual Current Switch doesn't work properly and it trips frequently without any apparent reason, probably is due to the electro-magnetic interference that are discharged through it.

First of all make sure that the length of the motor cable is less than 5m.

If so, we recommend to substitute it with a SI switch (see table below to choose the correct switch)

If you are already using this switch, but it still trips, you can try to SLIGHTLY modify the parameters **P.3.6.1 SWITCHING FREQ**

If strictly necessary, it is also possible to reduce the Inverter EMC PROTECTION CLASS by simply removing the screws marked with EMC in the powerhead (detailed information on the complete VACON 100X manual). This operation can compromise the operating field of animal identification and antennas in the farm. Avoid placing the motor cables in long parallel lines with other cables.

WARNING
Do not perform any modifications on the drive when it is connected to mains.

NOTE
If the cables-shield (MCCMK cable recommended) has been properly grounded on the motor and on the inverter, the EMC filter will discharge electro-magnetic interference through the ground.

SI SWITCH		iDRIVE100	
CODE	MAX CURRENT ALLOWED (A)	CODE	CURRENT (A)
9002447	25A	701 9001	3.4
		701 9002	4.8
		701 9003	5.6
		701 9004	8
		701 9005	9.6
		701 9006	12
		701 9007	16
		701 9008	23
9002448	40A	701 9009	31
		701 9010	38
9002336	63A	701 9011	46
		701 9012	61

9 FAULTS

9.1 Fault types

When an unusual operating condition is detected by iDRIVE100 control diagnostics, the drive initiates a notification visible on the keypad. The keypad will show the code, the name and a short description of the fault (or of the alarm).
The required action to solve the faults depends on the type of notifications displayed.

- ***Faults*** make the drive stop and require reset of the drive.
- ***Alarms*** inform of unusual operating conditions but the drive will continue running.
- ***Info*** may require resetting but do not affect the functioning of the drive.

For some faults you can program different responses in the application.

The fault can be reset with the ***Back/Reset button*** on the control keypad or via the I/O terminal. The faults are stored in the Fault history menu which can be browsed. The different fault codes can be found in paragraph ***9.2 - Fault table***.

9.1.1 Fault history

In Fault History menu (M4.3) you can find the last 40 faults occurred. For each fault in the memory you can select it and then press the ***Right Arrows Button*** to find additional information (as Code, ID, Date, …).

9.1.2 Fault reset

When a fault appears and the drive stops examine the cause of the fault. Perform the actions advised in this manual and reset the fault as instructed below.

- Keep pressed the ***Reset button*** on the keypad for 1s
- Alternatively, enter the ***Diagnostics menu*** (M4), select ***Reset faults*** (M4.2) and then confirm by selecting ***Reset faults*** parameter.

CAUTION
Remove external Start signal before resetting the fault to prevent unintentional restart of the drive.

9.2 Fault table

NOTE
If contacting InterPuls because of a fault condition, always write down all texts and codes on the keypad display.

CODE	ID	DESCRIPTION	POSSIBLE CAUSE	SOLUTION
1	1	Overcurrent (hardware fault)	iDRIVE100 has detected too high current (>4* I_H) in the motor cable: • sudden heavy load increase • short circuit in motor cables • unsuitable motor	Check loading, motor, cables and connections. Make identification run. Check ramp times.
	2	Overcurrent (software fault)		
2	10	Overvoltage (hardware fault)	The DC-link voltage has exceeded the limits defined. • too short a deceleration time • brake chopper is disabled • high overvoltage spikes in supply • Start/Stop sequence too fast	Make deceleration time longer. Use brake chopper or brake resistor (available as options). Activate overvoltage controller. Check input voltage.
	11	Overvoltage (software fault)		
3	20	Earth fault (hardware fault)	Current measurement has detected that the sum of motor phase current is not zero. • insulation failure in cables or motor	Check motor cables and motor.
	21	Earth fault (software fault)		
5	40	Charging switch	The charging switch is open, when the START command has been given. • faulty operation • component failure	Reset the fault and restart. Should the fault re-occur, contact the distributor near to you.
7	60	Saturation	Various causes: • defective component • brake resistor short-circuit or overload	Cannot be reset from keypad. Switch off power. DO NOT RE-CONNECT POWER! If this fault appears simultaneously with F1, check motor cables and motor.
8	600	System fault	Communication between control board and power unit has failed.	Reset the fault and restart. Should the fault re-occur, contact the distributor near to you.
	601		Communication between control board and power unit has interference, but it is still working.	
	602		Watchdog has reset the CPU	
	603		Voltage of auxiliary power in power unit is too low.	
	604		Phase fault: Voltage of an output phase does not follow the reference	
	605		CPLD has faulted but there is no detailed information about the fault	

	606		Control and power unit software are incompatible	Update software. Should the fault re-occur, contact the distributor near to you.
	607		Software version cannot be read. There is no software in power unit.	Update power unit software. Should the fault re-occur, contact the distributor near to you.
	608		CPU overload. Some part of the software (for example application) has caused an overload situation. The source of fault has been suspended	Reset the fault and restart. Should the fault re-occur, contact the distributor near to you.
	609		Memory access has failed. For example, retain variables could not be restored.	
	610		Necessary device properties cannot be read.	
	614		Configuration error.	
	647		Software error	Update software. Should the fault re-occur, contact the distributor near to you.
	648		Invalid function block used in application. System software and application are not compatible.	
	649		Resource overload. Error when loading parameter initial values. Error when restoring parameters. Error when saving parameters.	
9	80	Undervoltage (fault)	DC-link voltage is under the voltage limits defined. Most probable cause: • too low a supply voltage • AC drive internal fault • defect input fuse • external charge switch not closed NOTE! This fault is activated only if the drive is in Run state.	In case of temporary supply voltage break reset the fault and restart the AC drive. Check the supply voltage. If it is adequate, an internal failure has occurred. Contact the distributor near to you.
	81	Undervoltage (alarm)		
10	91	Input phase	Input line phase is missing.	Check supply voltage, fuses and cable.
11	100	Output phase supervision	Current measurement has detected that there is no current in one motor phase.	Check motor cable and motor.
12	110	Brake chopper supervision (hardware fault)	No brake resistor installed. Brake resistor is broken. Brake chopper failure.	Check brake resistor and cabling. If these are ok, the chopper is faulty. Contact the distributor near to you.
	111	Brake chopper saturation alarm		
13	120	AC drive undertemperature (fault)	Too low temperature measured in power unit's heatsink or board. Heatsink temperature is under -10°C.	Check the ambient temperature
14	130	AC drive overtemperature (fault, heatsink)	Too high temperature measured in power unit's heatsink or board. Heatsink temperature is	Check the correct amount and flow of cooling air. Check the heatsink for dust. Check the ambient temperature.

	131	AC drive overtemperature (alarm, heatsink)	over 100°C.	Make sure that the switching frequency is not too high in relation to ambient temperature and motor load.
	132	AC drive overtemperature (fault, board)		
	133	AC drive overtemperature (alarm, board)		
15	140	Motor stalled	Motor is stalled.	Check motor and load.
16	150	Motor overtemperature	Motor is overloaded.	Decrease motor load. If no motor overload exists, check the temperature model parameters.
17	160	Motor underload	Motor is underloaded.	Check load.
19	180	Power overload (short-time supervision)	Drive power is too high.	Decrease load.
	181	Power overload (long-time supervision)		
25	240	Motor control fault	Start angle identification has failed.	Reset the fault and restart. Should the fault re-occur contact the distributor near to you.
	241		Generic motor control fault.	
30	290	STO fault	Safe OFF signal A does not allow AC drive to be set to READY state.	Reset the fault and restart. Should the fault re-occur, contact the distributor near to you.
	291		Safe OFF signal B does not allow AC drive to be set to READY state.	
32	312	Fan cooling	Fan life time is up.	Change fan and reset fan life time counter.
33	320	Fire mode enabled	Fire mode of the drive is enabled. The drive's protections are not in use. It's a characteristic fault of the HVAC Application.	Check the parameter settings
37	360	Device changed (same type)	Option board changed for one previously inserted in the same slot. The board's parameter settings are saved.	Device is ready for use. Old parameter settings will be used.
38	370	Device changed (same type)	Option board added. The option board was previously inserted in the same slot. The board's parameter settings are saved.	Device is ready for use. Old parameter settings will be used.
39	380	Device removed	Option board removed from slot.	Device no longer available.
40	390	Device unknown	Unknown device connected (power unit/option board)	Device no longer available.
41	400	IGBT temperature	IGBT temperature (unit temperature + I2T) is too high.	Check loading. Check motor size. Make identification run.

44	430	Device changed (different type)	Option board changed or Power unit changed. No parameter settings are saved.	Set the option board parameters again if option board was changed. Set converter parameters again if power unit was changed.
45	440	Device changed (different type)	Option board added. The option board was not previously present in the same slot. No parameter settings are saved.	Set the option board parameters again.
51	1051	External Fault	Fault activated by digital input.	Check the digital input or the device connected to it. Check the parameter settings.
52	1052 1352	Keypad communication fault	The connection between the control keypad and frequency converter is broken	Check keypad connection and possible keypad cable
53	1053	Fieldbus communication fault	The data connection between the fieldbus master and fieldbus board is broken	Check installation and fieldbus master.
54	1654	Slot D fault	Defective option board or slot	Check board and slot.
	1754	Slot E fault		
65	1065	PC communication fault	The data connection between the PC and frequency converter is broken	
66	1066	Thermistor fault	The thermistor input has detected an increase of motor temperature	Check motor cooling and load. Check thermistor connection (If thermistor input is not in use it has to be short circuited)
68	1301	Maintenance counter 1 alarm	Maintenance counter has reached the alarm limit. It's a characteristic fault of the HVAC Application.	Carry out the needed maintenance and reset counter.
	1302	Maintenance counter 2 alarm		
	1303	Maintenance counter 3 alarm		
	1304	Maintenance counter 4 alarm		
69	1310	Fieldbus mapping error	Non-existing ID number is used for mapping values to Fieldbus Process Data Out.	Check parameters in Fieldbus Data Mapping menu.
	1311		Not possible to convert one or more values for Fieldbus Process Data Out.	The value being mapped may be of undefined type. Check parameters in Fieldbus Data-Mapping menu.
	1312		Overflow when mapping and converting values for Fieldbus Process Data Out (16-bit).	
100	1100	Soft fill timeout	The Soft fill function in the PID controller has timed out. The wanted process value was not achieved within time. It's a characteristic fault of the HVAC Application.	Reason might be a pipe burst.
101	1101	Process supervision fault (PID1)	PID controller: Feedback value outside of supervision limits (and the delay if set). It's a characteristic fault of the HVAC Application.	Check settings.
105	1105	Process supervision fault (PID2)		

13 MAINTENANCE

13.1 Requirements for storage

Store the device at a temperature between -40°C and 70°C (-40F ÷ 160F) in a non-condensing and non-corrosive ambient.
After a long storage (more than 6 months), keep iDRIVE100 powered (but not controlling the pumps) for an hour before start working.

13.2 Periodical maintenance

A specialized technician's visit is recommended for maintenance at last every 12 months in order to check the state of wear of the electrical and mechanical components of the system.
The check list may concern:

- Check input and output terminals and control I/O terminals.
- Check operation of cooling fan
- Check for corrosion on terminals and other surfaces
- Check the heatsink for dust and clean if necessary

If necessary change main fan before it's too late!

NOTE:
With iDrive 100, the reforming of capacitors after a long stop or storage period is not necessary.

A. APPENDIX - PROGRAMMING WITH LIVE SOFTWARE

LIVE is an application that can be used for parameterization or monitoring multiple drives.

A.1 Language selection

It's possible to modify the LIVE language by clicking ***Tools*** > ***Options*** (or F4) and then selecting the desired language.

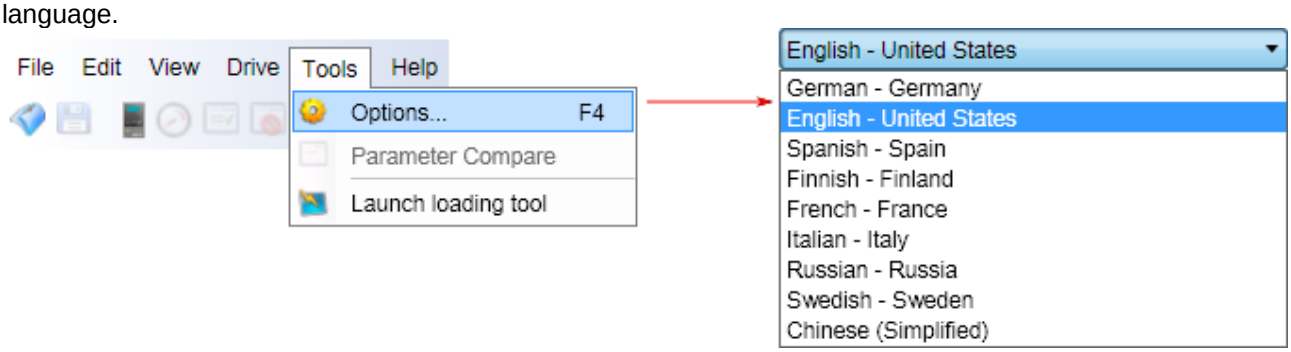

A.2 Connection to iDRIVE100

To connect the iDRIVE100 to the PC, is required an ethernet cable or a USB-RJ45 cable (Ref. 7010016)

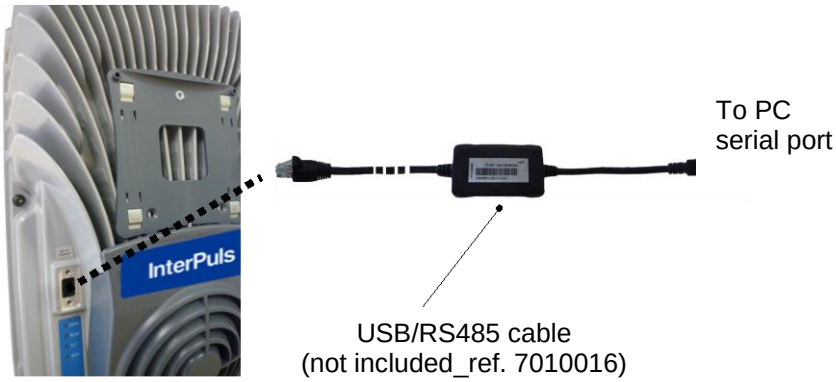

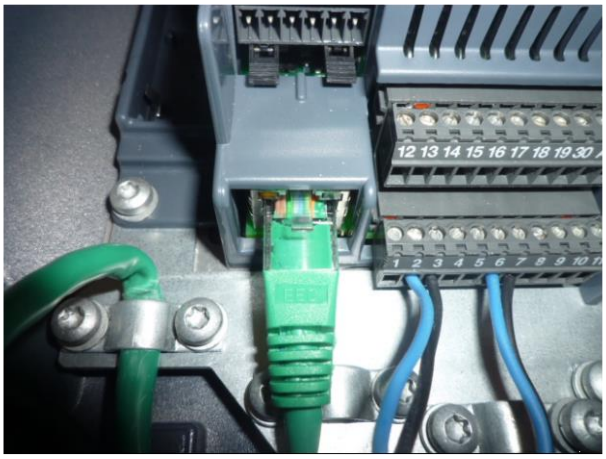

NOTE
The external connector is not an ethernet port. Use the external connector ONLY with USB-RJ45 adapter cable.
An ethernet connection port can be found inside the inverter near the signal connectors.

Once you have launched the program "LIVE", a window appears. Select the "**ONLINE**" mode if the cable is already connected to the iDRIVE100 and want to surf and modify parameters.

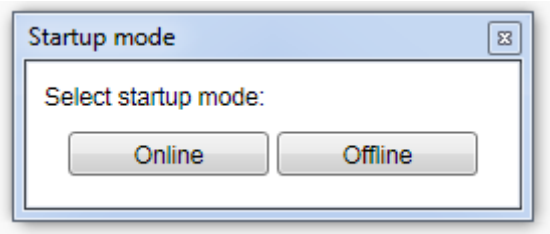

A dialog window will appear to select the type of connection - ***Serial*** or ***Ethernet*** or both.
With ***Serial*** it's possible to choose the USB port used and the speed (baud rate).
Selecting ***Ethernet***, you have to enter the IP address and the port of iDRIVE100 (you can find it in menu **5.8.1**)

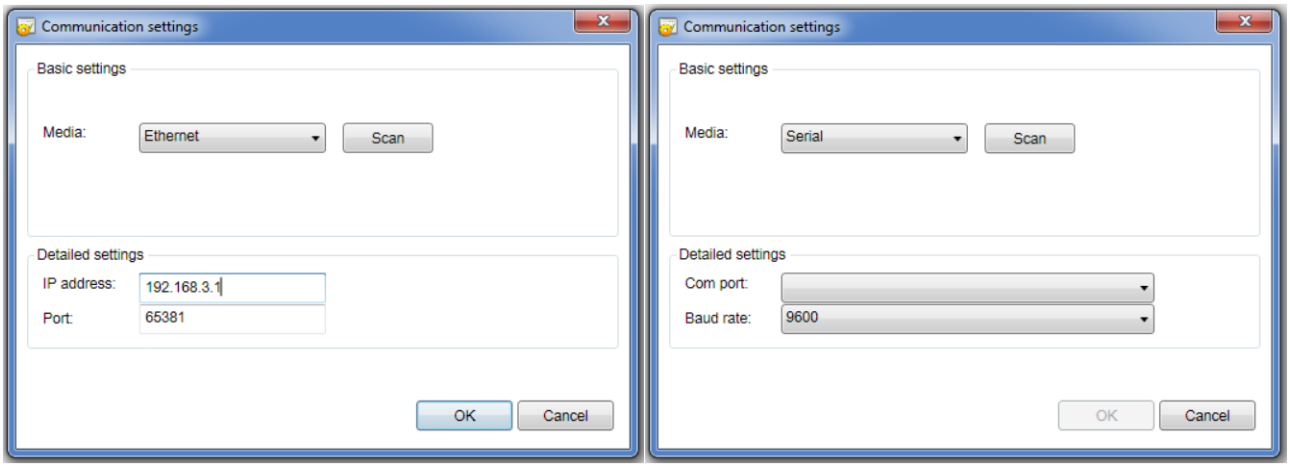

Once the connection parameters are set, click ***OK*** to search for iDRIVE100 connected to the PC. When the frequency controller is found, its informations appears. You can connect to it by choosing the device's row and clicking ***Connect to Selected***.

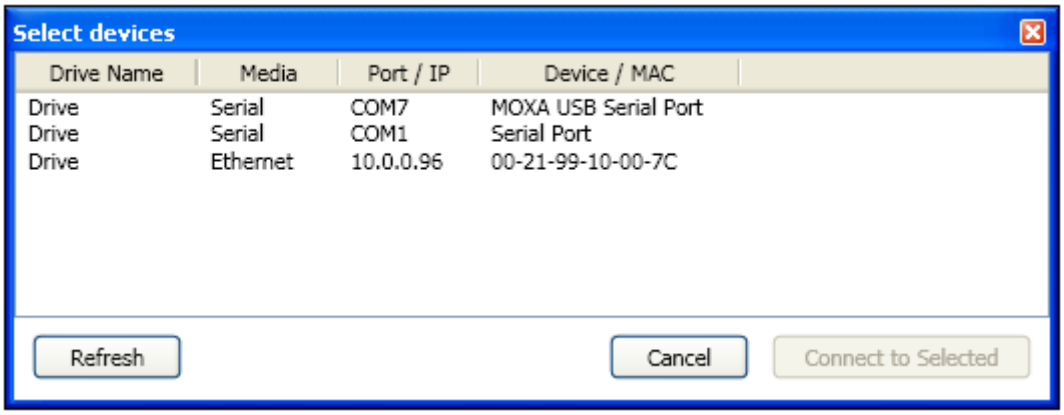

If you work ***Offline***, you can load a parameters list previously saved, using commands ***File*** > ***Open File…*** or icon .

NOTE

To go from OFFLINE to ONLINE mode, click Drive > New Drive or select the icon

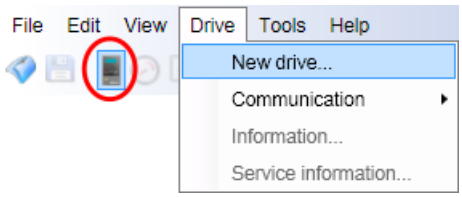

A.3 LIVE main menu

When the PC is connected to the iDRIVE100 (or when the parameters file has been loaded in ***Offline*** mode), the following screen appears.

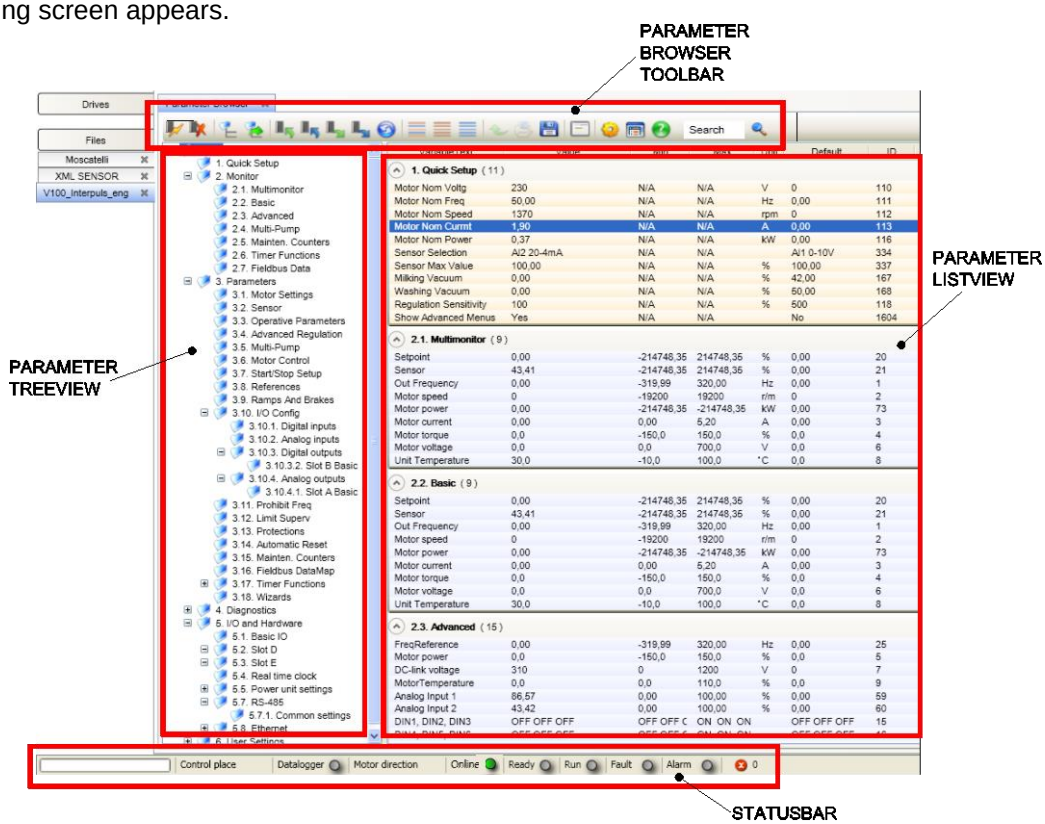

A.3.1 Parameter Browser Toolbar

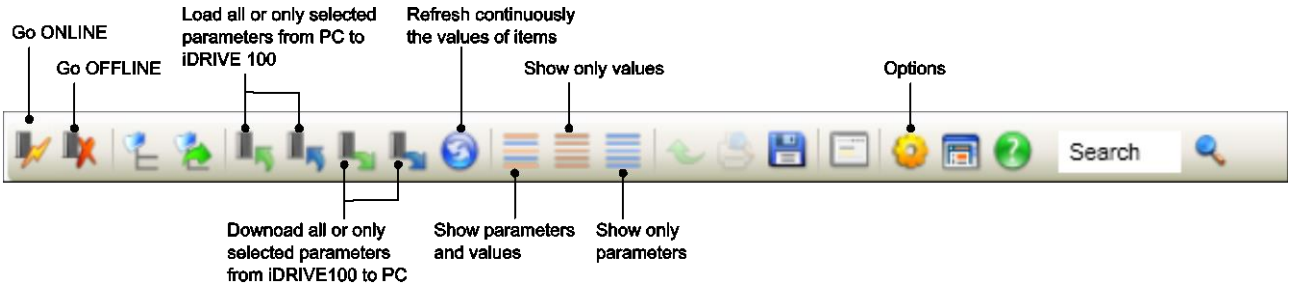

A.3.2 Statusbar

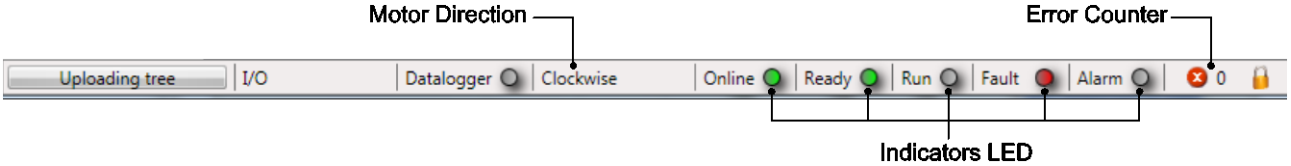

B. APPENDIX - START-UP OPERATIONS

B.1 BEFORE START

Check that:

1. the frequency converter and the motor are grounded.
2. the mains and motor cables comply with the requirements
3. the control cables are located as far as possible from the power cables.
4. the shields of the shielded cables (MCCMK cable reccomended) are connected to protective earth
5. the tightening torques of all terminals.
6. the wires do not touch the electrical components of the drive.
7. the common inputs of digital input groups are connected to +24V or ground of the I/O terminal.
8. all switches connected to the I/O terminals are in Stop-position.

See also *4.2.4 - Before switch on the power!*

C. APPENDIX - INSULATION CHECKS

C.1 MOTOR CABLE

Disconnect the motor cable from terminals U – V – W of the inverter and from the motor. Measure the insulation resistance of the motor cable between each phase conductor as well as between each phase conductor and the protective ground conductor. The insulation resistance must be >1 MΩ at ambient temperature of 20°C.

C.2 MAINS CABLE

Disconnect the mains cable from terminals L1 – L2 – L3 of the AC drive and from the mains. Measure the insulation resistance of the mains cable between each phase conductor as well as between each phase conductor and the protective ground conductor. The insulation resistance must be >1 MΩ at ambient temperature of 20°C.

C.3 MOTOR

Disconnect the motor cable from the motor and open the bridging connections in the motor connection box. Measure the insulation resistance of each motor winding. The measurement voltage must equal at least the motor nominal voltage but not exceed 1000V. The insulation resistance must be >1 MΩ at ambient temperature of 20°C.

PARAMETERS TABLE

CODE	NAME	DESCRIPTION	VALUE	PARAMETERS CLASS
P 1.1	Motor Nom Voltg	MOTOR RATED VOLTAGE		QUICK SETUP
P 1.2	Motor Nom Freq	MOTOR RATED FREQUENCY		
P 1.3	Motor Nom Speed	RATED MOTOR SPEED		
P 1.4	Motor Nom Currnt	RATED CURRENT ABSORBED BY ENGINE		
P 1.5	Motor Cos Phi	MOTOR COS Ø		
P 1.6	Sensor Selection	TYPE OF SENSOR		
P 1.7	Milking Vacuum	VACUUM LEVEL DURING MILKING		
P 1.8	Washing Vacuum	VACUUM LEVEL DURING WASHING		
P 1.9	Reagulat. Sensitivity	SPEED OF RESPONSE		
P 1.10	Min Frequency	MINIMUM FREQUENCY OF WORK		
P 1.11	Start Overboost	INCREASE MAXIMUM FREQUENCY AT START		
P 1.12	Multimonitor View	HOW MANY PARAMETERS SHOW		
P 3.1.1	Max Frequency	MAXIMUM OPERATING FREQUENCY MOTOR		MOTOR PARAMETERS
P 3.1.2	Motor Nom Voltg	MOTOR RATED VOLTAGE		
P 3.1.3	Motor Nom Freq	MOTOR RATED FREQUENCY		
P 3.1.4	Motor Nom Speed	RATED MOTOR SPEED		
P 3.1.5	Motor Nom Currnt	RATED CURRENT ABSORBED BY ENGINE		
P 3.1.6	Motor Cos Phi	MOTOR COS Ø		
P 3.1.7	Current Limit	MAXIMUM CURRENT FROM INVERTER TO MOTORS		
P 3.1.8	Auxiliary Fan	CHOOSE FOR FAN INDEPENDENT		
P 3.2.1	Sensor Selection	TYPE OF SENSOR		SENSOR PARAMETERS
P 3.2.2	Sensor Max Value	MAXIMUM SENSOR REFERENCE		
P 3.2.3	Sensor Offset	OFFSET SENSOR		
P 3.3.1	Min Frequency	MINIMUM FREQUENCY OF WORK		OPERATIVE PARAMETERS
P 3.3.2	Milking Vacuum	VACUUM LEVEL DURING MILKING		
P 3.3.3	Washing Vacuum	VACUUM LEVEL DURING WASHING		
P 3.3.4	Regulat. Sensitivity	SPEED OF RESPONSE		
P 3.3.5	Start Overboost	INCREASE MAXIMUM FREQUENCY AT START		
P 3.3.6	Vacuum safety limit	MAXIMUM VACUUM VALUE		
P 3.3.7	Show Advanced Menus	SHOWS HIDDEN PARAMETERS		
P.3.3.8	Edit Lock Level	STOP UNAUTHORIZED CHANGES		
P3.3.9	Password	UNLOCK THE PROTECTION LEVEL		